The City of Lago Vista

To provide and maintain a healthy, safe, vibrant community, ensuring quality of life.

NOTICE OF A REGULAR MEETING
IMPACT FEE ADVISORY COMMITTEE
TUESDAY, April 12, 2016, 7:00 PM
BOARD ROOM, VIKING HALL
8039 BAR K RANCH RD, LAGO VISTA, TX

NOTICE IS HEREBY GIVEN that the Impact Fee Advisory Committee of the City of Lago Vista, Texas will hold a meeting on the above date and time for discussion and possible action on the following:

PUBLIC COMMENTS FOR NON-HEARING RELATED ITEMS

ACTION ITEM

1. Recommendation and/or Written Comments to the City Council of amendments of the Land Use Assumptions and Capital Improvements Plan and possible amendment to the impact fees.
    A. Staff Presentation
    B. Open Public Comment
    C. Close Public Comment
    D. Commission Discussion
    E. Written Comments and Recommendation on Item

BUSINESS ITEM

1. Discussion of the 2015/16 1st Quarter of the Capital Improvements Program Reports

IT IS HEREBY CERTIFIED that the above Notice was posted on the Bulletin Board located in City Hall in said City at _____ on the _____ day of _____, 2016.

_____
Sandra Barton, City Secretary

THE CITY OF LAGO VISTA IS COMMITTED TO COMPLIANCE WITH THE AMERICANS WITH DISABILITIES ACT. REASONABLE MODIFICATIONS AND EQUAL ACCESS TO COMMUNICATIONS WILL BE PROVIDED UPON REQUEST. IN ADDITION TO ANY EXECUTIVE SESSION ALREADY LISTED ABOVE, THE IMPACT FEE ADVISORY COMMITTEE RESERVES THE RIGHT TO ADJOURN INTO EXECUTIVE SESSION AT ANY TIME DURING THE COURSE OF THIS MEETING TO DISCUSS ANY OF THE MATTERS LISTED ABOVE, AS AUTHORIZED BY TEXAS GOVERNMENT CODE FOR THE FOLLOWING PURPOSES: §551.071: CONSULTATION WITH ATTORNEY; §551.072: DELIBERATIONS REGARDING REAL PROPERTY; §551.073: DELIBERATIONS REGARDING GIFTS AND DONATIONS; §551.074: PERSONNEL MATTERS; §551.076: DELIBERATIONS REGARDING SECURITY DEVICES; §551.087: DELIBERATIONS REGARDING ECONOMIC DEVELOPMENT NEGOTATIONS

Development Services Department

STAFF REPORT

Written Comments concerning the Impact Fee Land Use Assumptions & Capital Improvement Projects

Date: April 4, 2016

Hearing Dates: Impact Fee Advisory Committee – April 12, 2016
City Council – April 21, 2016 and potentially May 5, 2016

FACTAL INFORMATION CONCERNING IMPACT FEES

Impact fees are accessed on new development in order to generate revenue for funding or recouping the costs of capital improvements or facility expansions necessitated by and attributable to the new development. Under Sec. 395.012 TLGC, impact fees can only pay the costs associated with constructing capital improvements or facility expansions, including and limited to construction contract price, surveying and engineering fees; land acquisition costs, including land purchases, court awards and costs, attorney's fees, and expert witness fees; and fees actually paid or contracted to be paid to an independent qualified engineer or financial consultant preparing or updating the capital improvements plan who is not an employee of the political subdivision. Impact fees cannot be used to maintain existing infrastructure.

ROLE OF THE PLANNING & ZONING COMMISSION

The Planning & Zoning Commission is allowed under State Law and City Code to act as the Impact Fee Advisory Committee. Under Sec. 395.056, TLGC the Committee must issue written comments on the proposed amendments to the land use assumptions, capital improvement plan, and impact fee. These comments can be any changes the Committee desires to the proposed plan.

HISTORY

In accordance with Sec. 395.012 TLCG, municipalities must review their accessed impact fees every (5) years through a detailed analysis known as an "Impact Fee Land Use Assumptions & Capital Improvement Projects Report". This was completed in 2014 with a recommendation and written comments from the Impact Fee Advisory Committee on October 30, 2014. The Committee recommended an increase in impact fees from $1,250 for both water and sewer for a living unit, set in 2008, to $2,115 for sewer, which is the maximum fee as denoted in the Report, and $3,000 for water (with $4,331 being the maximum as denoted in the Report). The increase was deemed necessary due to a project 4.67% yearly growth rate over a ten (10) year period. They also wanted the fee revisited in one (1) year from the date of the recommendation to see if the increase would affect housing starts. The City Council, at their December 18, 2014 meeting, affirmed the recommendation of the Committee and passed the impact fee increases with the same condition that it be revisited in one (1) year from the date of the consideration to see if the increase would affect housing starts. The increased

impact fees took effect on February 15, 2015 due to a delay imposed by Council. Staff has included a 2016 Neighboring Jurisdiction Impact Fees to see neighboring communities' impact fees.

The Impact Fee Advisory Committee previously heard this item at a November, 2015 meeting and based on the information provided at that time recommended unanimously (4-0) raising the water impact fee from $3,000 to $4,331; however that meeting was more of a re-visitation based on the one (1) year condition versus the actual required hearing under State Law as prescribed in the Ordinance.

DEPARTMENT COMMENTS

The Department has continued to see significant increases in the amount of building permits issued for each fiscal year. This includes during the time of the impact fee increase as shown in the below charts. The charts are from information in the City's permitting system (MyPermitsNow) and have been presented in past City Council packets.

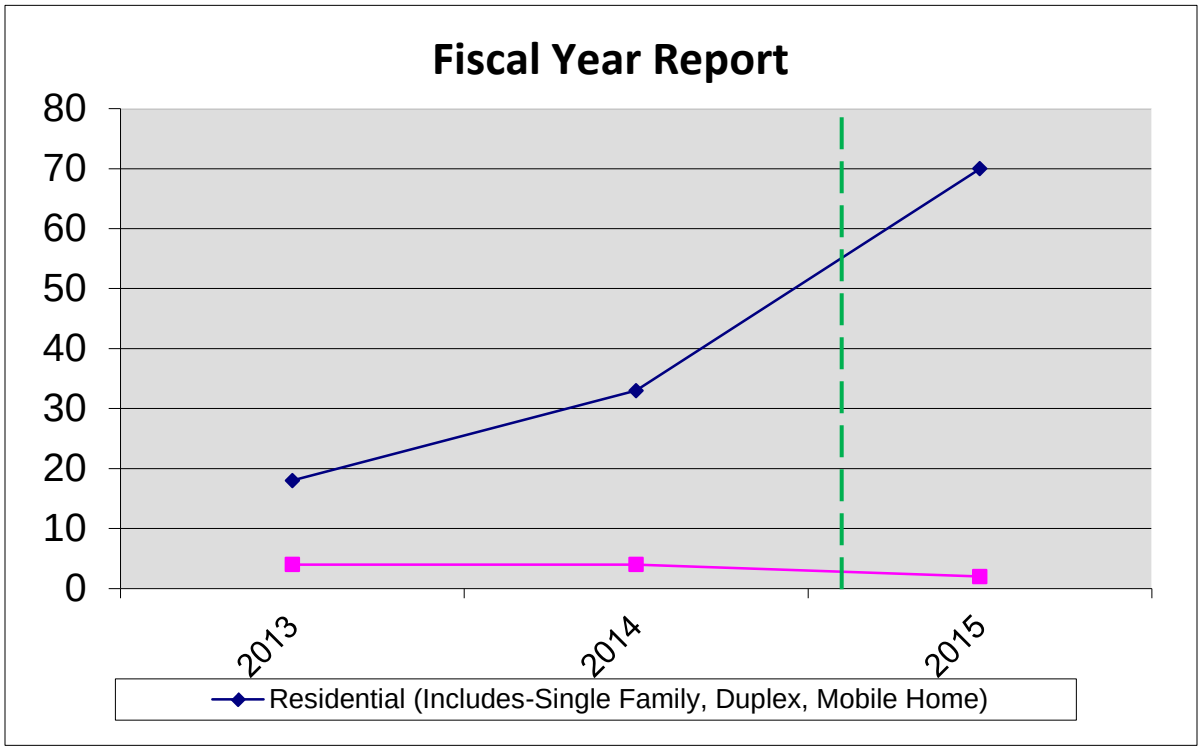

See Next Page

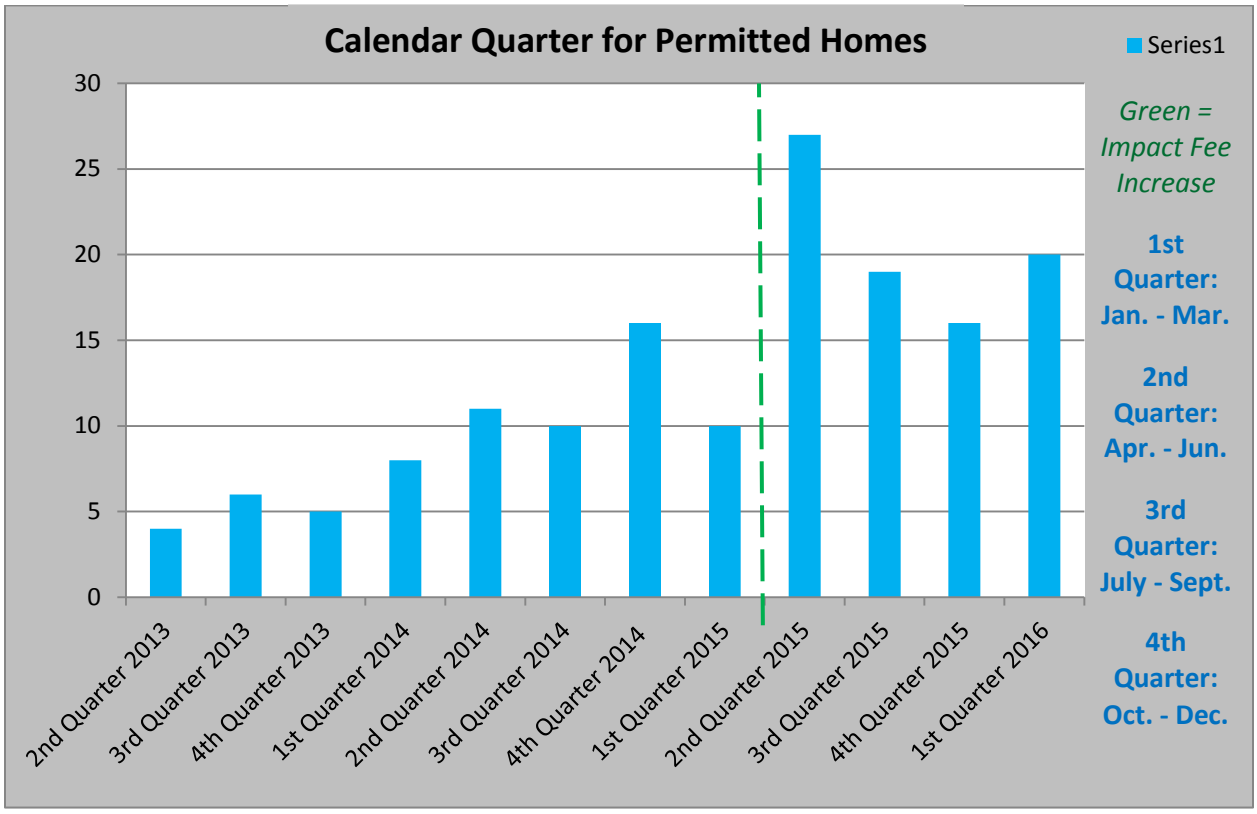

The Report is also being reviewed and reapproved due to an error in the calculation. In the original 2014 report some water related infrastructure was incorrectly calculated into the Plan. This has been removed and thereby has reduced the maximum water impact fee from $4,331 to $4,206 as stated within the revised report.

POTENTIAL ACTION

The Impact Fee Advisory Committee/City Council will need to review the attached information and decide the following:

1) Reduce the water and/or wastewater impact fee to a specified amount.

2) Retain the current water and wastewater impact fees of $3,000 and $2,115 respectively.

3) Increase the water impact from the current $3,000 up to the maximum amount of $4,206 and retain the maximum wastewater impact fee of $2,115.

During this review and recommendation/consideration the Committee/Council will make a motion to do a potential action and add the following findings:

1) That the Report was consistent with State Law and good engineering practices

2) That the underlying impact fee calculations were reasonable and useful for City purposes.

3) That the methodology used in the calculation of the water and wastewater fees were in good condition.

Attachment 1

Ordinance

ORDINANCE NO. 16-04-21-____

AN ORDINANCE OF THE CITY COUNCIL OF THE CITY OF LAGO VISTA, TEXAS, ADOPTING THE UPDATES TO THE LAND USE ASSUMPTIONS AND CAPITAL IMPROVEMENTS PLAN AND APPROVING THE IMPOSITION OF CHANGED IMPACT FEES THROUGN A PUBLIC HEARING CONCERNING AMENDING ORDINANCE NO. O-29-14 AND TABLE 1, SET OUT IN APPENDIX "A," SEC. 6.100, CODE OF ORDINANCES OF LAGO VISTA; PROVIDING OPEN MEETING AND EFFECTIVE DATE PROVISIONS; AND PROVIDING FOR RELATED MATTERS.

Whereas, pursuant to *Chapt.* 395, *TEX. LOC. GOV'T. CODE,* the City Council (the "Council") of the City of Lago Vista, Texas (the "City") adopted Ordinance No. O-29-14, which approved the Capital Improvement Plan and Land Use Assumptions, set out as Exhibit "A" to the Ordinance, and established water and wastewater impact fees for connection to the City's water and wastewater system, set out presently in Article 13.200, Water and Wastewater Impact Fees, Chapter 13, Utilities;

Whereas, the City has undertaken to update the Capital Improvement Plan and the Land Use Assumptions to determine whether any amendments are advisable and determine whether the impact fees should be amended pursuant to Sec. *395.052, TEX. LOC. GOV'T. CODE;*

Whereas, pursuant to Sec. 9.1702, Code of Ordinances of the City of Lago Vista, the City's Planning and Zoning Commission is to serve as the Advisory Committee.

Whereas, the Advisory Committee met on April 12, 2016 in order to issue written comments in accordance with *Secs. 395.056 TEX. LOC. GOV'T CODE,* set out as Exhibit "B" to the Ordinance; and

Whereas, pursuant to *Secs. 395.050 TEX. LOC. GOV'T CODE,* the Advisory Committee has filed its written comments on the proposed impact fees before the fifth (5th) business day before the date of the public hearing on the imposition of the fees; and

Whereas, pursuant to *Secs. 395.054 TEX. LOC. GOV'T CODE,* the City Council held a public hearing on April 21, 2016 to discuss the proposed Ordinance amending land use assumptions, the capital improvements plan, and the impact fee.

NOW, THEREFORE, BE IT ORDAINED BY THE CITY COUNCIL OF THE CITY OF LAGO VISTA, TEXAS, THAT:

Section 1. Findings. The findings and recitations set out hereinabove are found to be true and correct and are hereby adopted by the City Council, and made a part hereof for all purposes as findings of fact.

Section 2. Public Hearing. The City Council of the City of Lago Vista held a public hearing to discuss and review the updates to the Capital Improvement Plan and the Land Use Assumptions and determine whether to amend the plan and if so, what amendments to the Capital Improvement Plan, Land Use Assumptions and/or Impact Fee.

Section 3. Advisory Committee. The City Council of the City of Lago Vista confirms that the Advisory Committee reviewed and filed its written comments on the proposed amendments to the Land Use Assumptions, Capital Improvements Plan, and Impact Fees before the fifth (5th) business day before the date of the public hearing on the amendments.

Section 4. Effective Date. This ordinance shall take effect on August 15, 2016.

Section 5. Open Meetings. It is hereby officially found and determined that the meeting at which this Ordinance was passed was open to the public as required and that public notice of the time, place, and purpose of said meeting was given as required by the Open Meetings Act, *Chapter 551, Texas Government Code.*

PASSED AND APPROVED on this the _____ day of _____, 2016.

THE CITY OF LAGO VISTA

Attest:

_____
Dale Mitchell, Mayor

_____
Sandra Barton, City Secretary

Exhibit “A”

Capital Improvement Plan & Land Use Assumptions

ORDINANCE NO. 16-04-21-_____

AN ORDINANCE OF THE CITY OF LAGO VISTA, TEXAS, ORDERING A PUBLIC HEARING CONCERNING AMENDING ORDINANCE NO. O-29-14 AND TABLE 1, SET OUT IN APPENDIX "A," SEC. 6.100, CODE OF ORDINANCES OF LAGO VISTA; PROVIDING OPEN MEETING AND EFFECTIVE DATE PROVISIONS; AND PROVIDING FOR RELATED MATTERS.

Whereas, pursuant to *Chapt.* 395, *TEX. LOC. GOV'T. CODE*, the City Council (the "Council") of the City of Lago Vista, Texas (the "City") adopted Ordinance No. O-29-14, which approved the Capital Improvement Plan, set out as Exhibit "A" and the Land Use Assumptions, set out as Exhibit "B" to the Ordinance, and established water and wastewater impact fees for connection to the City's water and wastewater system, set out presently in Article 13.200, Water and Wastewater Impact Fees, Chapter 13, Utilities;

Whereas, the City has undertaken to update the Capital Improvement Plan and the Land Use Assumptions to determine whether any amendments are advisable and determine whether the impact fees should be amended pursuant to Sec. *395.052, TEX. LOC. GOV'T. CODE;*

Whereas, pursuant to *Secs. 395.053 and 395.054, TEX. LOC. GOV'T CODE*, the City must adopt an order setting a public hearing to discuss and review the update and shall determine whether to amend the plan, assumptions and/or impact fees; and

Whereas, pursuant to Sec. 9.1702, Code of Ordinances of the City of Lago Vista, the City's Planning and Zoning Commission is to serve as the Advisory Committee.

NOW, THEREFORE, BE IT ORDAINED BY THE CITY COUNCIL OF THE CITY OF LAGO VISTA, TEXAS, THAT:

Section 1. Findings. The findings and recitations set out hereinabove are found to be true and correct and are hereby adopted by the City Council, and made a part hereof for all purposes as findings of fact.

Section 2. Order. The City Council of the City of Lago Vista hereby orders a public hearing to be set for April 21, 2016 to discuss and review the updates to the Capital Improvement Plan and the Land Use Assumptions and determine whether to amend the plan and if so, which amendments are to be approved to the Capital Improvement Plan, Land Use Assumptions and/or Impact Fees and to cause such notices of such public hearing to be given as required by *Secs. 395.053, 395.054 and 395.055, Tex. Loc. Gov't Code.*

Section 3. Advisory Committee. The City Council of the City of Lago Vista requests that the Advisory Committee review and file its written comments on the proposed amendments to the Land Use Assumptions, Capital Improvements Plan, and Impact Fees before April 14, 2016, the fifth (5th) business day before the date of the public hearing on the amendments.

Section 4. Effective Date. This ordinance shall take effect August 15, 2016

Section 5. Open Meetings. It is hereby officially found and determined that the meeting at which this Ordinance was passed was open to the public as required and that public notice of the time, place, and purpose of said meeting was given as required by the Open Meetings Act, *Chapter 551, Texas Government Code*.

PASSED AND APPROVED on this the ____ day of _____, 2016.

THE CITY OF LAGO VISTA

Attest:

_____
Dale Mitchell, Mayor

_____
Sandra Barton, City Secretary

IMPACT FEE REPORT UPDATE
FOR
IMPACT FEE LAND USE ASSUMPTIONS
AND
CAPITAL IMPROVEMENT PROJECTS

City of Lago Vista, Texas
Water and Wastewater Utility

Year 2014 Update

Adopted _____

Report Submitted: October 27, 2014

Prepared by:

HAYNIE CONSULTING, INC.
CONSULTING ENGINEERS
1010 Provident Lane
Round Rock, Texas 78664-3276
Ph: (512) 837-2446 Fax: 837-9463

STATE OF TEXAS
TIM HAYNIE
91819
LICENSED
PROFESSIONAL ENGINEER

27-OCT-2014

Tim Haynie, P.E.
Haynie Consulting, Inc., Texas Registered Engineering Firm # F-2411

IMPACT FEE REPORTS

TABLE OF CONTENTS

IMPACT FEE LAND USE ASSUMPTIONS		PAGE
LIST OF MAPS, TABLES, FIGURES AND ATTACHMENTS		3
I.	INTRODUCTION	4
II.	SERVICE AREA	5
III.	GROWTH PROJECTIONS	6
IV.	LIVING UNIT EQUIVALENT (LUE)	8
IMPACT FEE CAPITAL IMPROVEMENTS PLAN		
I.	INTRODUCTION	9
II.	FACILITY PLANNING - CAPACITY NEEDS	10
III.	IMPACT FEE FACILITIES AND FEE CALCULATION METHODOLOGY	12
IV.	SERVICE UNIT DEMAND AND CAPACITY RELATIONSHIPS	14
V.	LUE DEMAND PROJECTIONS	18
VI.	CAPACITY AND COST ATTRIBUTABLE TO NEW GROWTH	19
VII.	CALCULATION OF MAXIMUM ALLOWABLE IMPACT FEE	20
VIII.	IMPACT FEE ASSESSMENT	21
IX.	COLLECTED FEES	22
X	LIST OF MAPS, TABLES, FIGURES AND ATTACHMENTS	23

IMPACT FEE REPORTS

LIST OF TABLES, FIGURES AND ATTACHMENTS

IMPACT FEE CAPITAL IMPROVEMENTS PLAN

	PAGE
MAP 1 – City of Lago Vista, TX, City Limits and ETJ	24
TABLE 1 – LUEs Associated With Meter Size and Type	15
TABLE 2 - Water System Costs	25
TABLE 3 - Wastewater System Costs	29
TABLE 4 - Water System Model	31
TABLE 5 - Wastewater System Model	37
TABLE 6 – Population Estimates / Projections Data	43
FIGURE 1 – Water Flow Diagram	44
FIGURE 2 – Wastewater Flow Diagram	46
ATTACHMENT 1 – The Community Impact Fee Ordinance	48

CITY OF LAGO VISTA, TEXAS
Water and Wastewater Utilities

Year 2014 Update

IMPACT FEE LAND USE ASSUMPTIONS

I. INTRODUCTION

On December 14, 2000, the City of Lago Vista (City) adopted Ordinance No. 00-12-14-07 "Establishing Water and Wastewater Impact Fees" in accordance with chapter 395 of the Local Government Code. The ordinance and associated impact fees were established and based on the Service Area Land Use Assumptions and Capital Improvements Plan. The current maximum calculation fee and current imposed fees are summarized below:

	Fee Per Service Unit	
	Maximum Fee 2014	**Fees Imposed (Ordinance 00-12-14-07)**
Water	$ 4,331.00	$ 1,250.00
Wastewater	$ 2,115.00	$ 1,250.00

Texas law, specifically Texas Local Government Code, Chapter 395, enacted by the State Legislature in 1987 (Senate Bill 336) and amended in 1989, empowers cities to impose and collect "impact fees" and establishes the guidelines cities must follow to do so. The term "impact fee" includes the "capital recovery fees" that the City of Lago Vista charges for facility expansion of its water and wastewater systems.

Among the several requirement imposed on cities by Chapter 395 is the development and approval of a report called "land use assumptions." Section 395.001 (5) of the Local Government Code defines the term succinctly: "'land use assumptions' includes a description of the service area and projections of changes in land uses, densities, intensities, and population therein over at least a 10-year period."

This report has been prepared for the purpose of complying with the requirements of Chapter 395 of the Texas Local Government Code with respect to "land use assumptions." It is an amendment to the City's impact fee land use assumptions approved by the City Council on December 14, 2000. State law requires that the land use assumptions be updated at least every five years.

II. SERVICE AREA

The "service area", for the purposes of these land use assumptions, is the entire area within the corporate boundary of the City and its existing extraterritorial jurisdiction (ETJ) that is anticipated to be served within the next ten years by the existing and to be expanded City water and wastewater systems and the facilities listed in this update of the revised Impact Fee Capital Improvements Plan. The boundary encompassing this area is illustrated on the official "Land Use Assumption Map", located herein, page 24.

The Impact Fee "service area" defines the area to be used to calculate projected "living unit equivalent (LUE)" and the impact fee.

The service area for this 2014 update includes the land within the boundary of the City's Limits and the ETJ as of June 2014.

These land use assumptions anticipate that the impact fees to be calculated will be imposed uniformly over the entire service area and will be calculated in a manner consistent with that premise. This is explicitly provided for by 1989 amendments to Chapter 395 of the Texas Local Government Code, which added Section 395.0455, stating:

> *System-Wide Land Use Assumptions is addressed in the following paragraph:*
>
> *(a) In lieu of adopting land use assumptions for each service area, a political subdivision may, except for storm water, drainage, flood control and roadway facilities, adopt system-wide land use assumptions, which cover all of the area subject to the jurisdiction of the political subdivision for the purpose of imposing impact fees under this chapter.*

III. GROWTH PROJECTIONS

The following growth information is for time periods corresponding to years 2008 and 2024. The study period from 2014 to 2024 for this report corresponds to the ten year time horizon for the updated land use assumptions required by the Texas Local Government Code. The growth data presented below is for a uniform system wide growth rate of 4.67% per annum.

The 2014 update began with adjusted 2008 population data and adjusted dwelling units used as a baseline to calculate ten year estimated growth values.

Current population is estimated at 6,500 with 3551 existing water LUEs and 3073 existing wastewater LUEs. The growth experienced over the past 5 and a half years has been less than 1% per annum. As the economy picks up, growth will return. Growth in the surrounding cities of Cedar Park and Leander will tend to bring outside development towards the City. The original City boundary defined as old Lago Vista is estimated to grow at 4.67% per annum (calculated as simple interest) which is an additional 3,036 people (1,320 LUEs) over the next 10-years for a total of 9,536 people and an estimated total of 4,871 water LUEs and 4,393 wastewater LUEs.

The difference between the number of 2014 water and wastewater LUEs of 478 is due to several factors, including irrigation and swimming pool water connections without corresponding wastewater connections and homes with no wastewater connection as they are on septic systems. The water and wastewater LUE difference in 2014 has been carried over through the 2024 LUE estimate with the thought that for every wastewater (septic system) added to the City wastewater system as an LUE, another irrigation or swimming pool LUE would be added without wastewater service.

The planned and annexed development areas, most of which are inactive at this point in time, are listed below. They are also estimated to develop at 4.67% per year.

	LUES TOTAL AT BUILDOUT			
Development	North		South	
Mahogany	720			
Tessera	2,030			
Villas at Keegans	188			
Peninsula	208			
Tusikani			342	
Falls			520	
Marshall's			1,078	
Hollows	864			
Sunset Harbor			288	
	4,010	+	2,228	= 6,238 LUEs AT BUILDOUT

The planned developments are projected to build-out at 4.67% per year the next 10-years. This will add 2,914 LUEs to the City. Therefore, the addition of these planned developments will add 6,703 persons to the City population.

By the year 2024, the projected total population is estimated to be (9,537 *[old Lago Vista]* + 6,703 *[Planned Developments])* is 16,238, with a total of 7,785 water LUEs and 7,307 wastewater LUEs, and these LUE totals are used to calculate the cost per LUE; see

calculated cost per LUE on Table 2, page 27 for water and Table 3, page 29 for wastewater.

The water and wastewater areas are calculated from utility service boundary lines. Land use acreage by various residential and non-residential categories is not required for the update.

Population Growth is projected by utility service area. The estimated 2014 population and projected 2024 population is aggregated to the service area. These population figures correspond to base line of existing residents plus the estimates and projections of residents to receive City of Lago Vista water and/or wastewater service.

IV. LIVING UNIT EQUIVALENT (LUE)

Water and Wastewater LUE Assumptions

Calculation of the impact fee in accordance with Chapter 395 of the Local Government Code requires the use of a service unit or in the case of the City a "living unit equivalent (LUE)". Within the definitions section of Chapter 395, "LUE" means a standardized measure of consumption, use, generation or discharge attributable to an individual unit of development calculated in accordance with generally accepted engineering or planning standards for a particular category of capital improvements or facility expansions."

To use a simplified explanation, the number of projected new LUEs are divided into the costs of capital projects allocated to this new growth in order to calculate the allowable impact fee (per LUE). The City has selected the City of Austin's standards for measuring LUEs for single-family and large multi-family and commercial water users, the measure chosen attempts to accurately reflect differences in service consumption between users." Table 1 (page 15) illustrates the relationship between LUEs and meter sizes. The LUE calculation depends on the relative differences between the various sizes and types of meters as determined by their rated maximum flows and rated continuous flows.

The size and type of water meter purchased determines number of LUEs in accordance with Table 1.

The LUE is well accepted, and it is easy to calculate at time of water tap sale. In addition, it is based on criteria that directly reflect the differences in service consumption between different users.

The projection of new service units is dependent on the types and numbers of meters sold, while the basis for the forecasts are population converted to water and wastewater flows.

All future forecasts are derived from population projections. These population projections are then converted to estimates of water use and wastewater generation. If the assumption is maintained that the relationship between water use and LUEs will remain fairly constant, the LUE figure obtained above will provide a projection of future LUEs, and consequently, new LUE growth.

IMPACT FEE CAPITAL IMPROVEMENTS PLAN

I. INTRODUCTION

The Texas Impact Fee Act (Chapter 395 of the Texas Local Government Code) provides methods and procedures that the City must follow to continue to impose its water and wastewater capital recovery fees. This act requires the determination of the costs of capital improvements attributable to new growth for a specified period of time. These costs are the principal building blocks on which the calculation of impact fees is based. The plan identifies the capital improvements or facility expansions for which impact fees may be assessed in termed the "Capital Improvements Plan" (CIP). In 2001, the City achieved compliance with the Texas Impact Fee Act by approving land use assumptions and the impact fee CIP on December 14, 2000. Beginning September 1, 2001, the Texas Impact Fee Act stipulates that these updates are to be done at least every five years. The five-year period begins on the day the impact fee CIP is adopted. This document represents the update to the CIP. Both it and the land use assumptions can be adopted at the same time.

The law outlines a methodology for calculating the cost of particular facilities attributable to new growth based on a defined planning period (not to exceed 10 years). The planning period establishes a time frame in which to evaluate capacity made available for new growth as compared to the demand for that capacity represented by the land use assumptions. One of the keys to the methodology is the expression of both demand and capacity for a particular project in terms of LUEs. By knowing the number of LUEs associated with the impact fee projects that are expected to be used during the planning period, the capacity and cost attributable to new growth can readily be determined. Using this cost and the projected total number of new LUEs within the utility service boundary during the planning period, the "maximum fee per LUE" may be calculated as prescribed by the law. The methodology of the CIP provides the framework for calculating the maximum allowable impact fee, which is simply the upper limit on the fee pursuant to the law.

The methodologies employed in this Impact Fee CIP comply with the provisions of the Texas Impact Fee Act. This update is extensively reworking the list of qualified CIP projects from the first report and the addition of new developments. It continues to exclude developer funded projects and projects that are predominately dedicated to existing users, or that may not be constructed within the ten-year planning period. And in cases where other participants contributed funds, only the City's shares of the costs were included. The capacity, costs, and of each services area was studied on a project by project basis.

The Impact Fee CIP process calculates the maximum allowable fee. This calculation conforms to the state requirement for a credit equal to 50 percent of the total projected cost of implementing the capital improvements plan.

II. FACILITY PLANNING – CAPACITY NEEDS

Impact fee CIP presents the water and wastewater CIP projects in Tables 2 and 3.

Section 395.014 of the Impact Fee law as codified in the Texas Local Government Code speaks to a CIP that addresses:

(1) a description of the existing capital improvements within the service area and the costs to upgrade, update, improve, expand, or replace the improvements to meet existing needs and usage and stricter safety, efficiency or environmental or regulatory standards.

(2) an analysis of the total capacity, the level of current usage and commitments for usage or capacity of the existing capital improvements. The capacity analysis is presented in Tables 4 and 5.

Using the methodology described later in this document, major facilities targeted to benefit new growth are identified and the portions of capacity serving existing and future users estimated. To provide an overall comparison of the capacity and costs associated with new growth projects versus those associated with existing needs, the recent CIP projects of the City Utility have been divided into three groups. 1.) Those projects scheduled to be built in the next few years that are targeted to benefit existing users and to meet stricter safety, efficiency, environmental or regulatory standards are not included. 2.) Tables 2 and 3 list those water and wastewater impact fee projects that have been built or plan to be built in the future and that will largely benefit new Utility customers during the next ten years. 3.) Projects that are anticipated to be built beyond the ten-year planning period are not noted in the tables and are not included in the basis of impact fee calculations.

Analysis of the level of existing capacity usage in the case of water and wastewater treatment plants is a straightforward examination of flow data. Flow data for pipes in the water distribution system and wastewater collection system is generally not available, so spreadsheet models are used to help estimate utilization levels of pipes under selected demand conditions (existing or future). The summary tables at the end of this document, Tables 12 and 13, include an estimate of the existing users and the total capacity of impact fee projects expressed in LUEs for water pressure zones and wastewater collection areas. Inspection of these figures gives an indication of the level of existing capacity usage and the reserve capacity associated with the facilities.

In sizing and timing new facilities, population projections (the Land Use Assumptions) are used in predicting demands (flows) associated with future growth. These demands are then input into the service demand spreadsheet. The spreadsheet simulations yield the necessary tank, pump and pipe capacities to meet pressure and flow performance objectives. The Utility's CIP planning employs cost-effectiveness analysis to identify the best sizing investment alternatives.

The principle factors weighed in this analysis are:

- capital costs
- operation and maintenance costs
- economy of scale
- environmental and other key non-financial impacts

In typical utility engineering practice the above factors result in a cost-beneficial range of reserve capacity of twenty to thirty years, depending on the type of facility. The Utility's CIP is the set of facilities that will satisfy needs for additional capacity in the next ten years as indicated by the Land Use Assumptions.

The Utility seeks to maintain a healthy, cost-effective amount of reserve capacity in the water and wastewater system in order to carry out its mission of providing safe, reliable service. In this way, the commitments that the City makes to its customers in the form of tap sales, service extension requests, reimbursement contracts, and other contracts, can be fulfilled in a manner that allows all parties in the development process to plan efficiently. The impact fee methodology prescribed by state statute serves the function of quantifying the cost of the reserve capacity that constitutes the Utility's plan for serving new customers for a ten-year planning horizon.

III. IMPACT FEE FACILITIES AND FEE CALCULATION METHODOLOGY

The facilities that provide the bulk of water and wastewater capacity for new growth in the City's service area are listed in Table 4 and Table 5. They were selected according to the following criteria:

(1) Has the predominant function of serving new growth rather than existing growth;
(2) Does not provide repair, operation or maintenance of existing facilities;
(3) Does not upgrade, expand or replace existing facilities serving existing development in order to meet stricter safety, environmental or regulatory standards.

These impact fee projects represent the individual projects that provide capacity necessitated by new development projected to occur within the next ten years.

To determine the costs of projects attributable to new growth, the Texas Impact Fee Act outlines a conceptually simple 4-step process based on quantifying the demand versus capacity relationship for projects in service areas. The process can be stated as follows:

Step 1. Determine capacity of project in LUEs and cost per LUEs.
Step 2. Determine future demand (capacity used up) for project in LUEs for the ten-year planning period.
Step 3. Determine the project cost attributable to new growth, which is the cost per LUE (Step 1).

To complete the impact fee calculation, the law calls for the calculation stated in Step 4:

Step 4. The construction cost per LUE may not exceed the amount determined by dividing the summation of the costs of the capital improvements (Step 3) by the total number of projected service units for the ten-year planning period from the Land Use Assumptions.

The methodology of Step 2 is difficult to determine the capacity that will be depleted in an individual project during the planning period. The spatial allocation of new users from the Land Use Assumptions is used to estimate the actual usage of a given project. To carry out this approach in a manageable manner, the water and wastewater service areas were divided up into subareas, pressure zones for water and drainage areas for wastewater. Sets of projects are assigned to each subarea, and the capacity addition to the subarea system is then defined. The assumption is made that each new user in a subarea uses a LUE of the available capacity associated with the selected set of impact fee projects in that subarea. The structure of Tables 4 and 5 illustrates this "subarea" methodology.

The resulting calculation for each subarea may be considered as a weighted average cost of impact fee facilities based on project dollar values for improvements at the locations called upon for service to new growth.

Calculation of the impact fee is not sensitive to the length of the planning period or the number of new growth users as long as all projects have more than enough capacity for growth (in excess of capacity serving existing users) through the planning period, as is the case with the great majority of the City's impact fee improvements, because the number of new LUEs occurs in both the numerator and denominator of the fee calculation. The calculation is not sensitive to the location of new users.

The Act allows the maximum impact fee to be charged if revenues from future ad valorem taxes, and water and sewer bills are included as a credit in the analysis. If not, the act allows the maximum fee to be set at 50% of the calculated maximum fee. The 50% method was used in the calculation. The following items were included in the impact fee calculation:

A. The portion of the cost of the new infrastructure that is to be paid by the City including engineering, property acquisition and construction cost.

B. Existing excess capacity in lines and facilities that will serve future growth and which were paid for in whole or part by the City.

C. Engineering and quality control fees for construction projects.

D. Interest and other finance charges on bonds issued by the City to cover its portion of cost.

IV. SERVICE UNIT DEMAND AND CAPACITY RELATIONSHIPS

Calculation of the impact fee in accordance with Chapter 395 of the Texas Local Government Code requires the use of a "service unit" or "LUE" as presented in this study. "LUE" means a standardized measure of consumption, use, generation or discharge attributable to an individual unit of development calculated in accordance with generally accepted engineering or planning standards for a particular category of capital improvements or facility expansions."

To use a simplified explanation, the number of projected new LUEs are divided into the costs of capital projects allocated to this new growth in order to calculate the allowable impact fee (per LUE). The City has selected the LUE as their standard for measuring service units, this measure attempts to accurately reflect differences in service consumption between users.

The City's capital recovery fee ordinances have for years used the LUEs for this purpose, and it remains the most appropriate choice for the "service unit" under the terms of Chapter 395. The LUE is based on the size of water meter sold. Table 1 illustrates the relationship between LUEs and meter sizes. The LUE calculation depends on the relative differences between the various sizes and types of meters as determined by their rate of continuous flow and maximum flow for each meter.

The number of LUEs is determined by the size and type of the water meter purchased for the property and in accordance with the schedule in Table 1.

Table 1. LUES ASSOCIATED WITH METER SIZE AND TYPE

The size and type of water meter purchased determines number of LUEs in accordance with the following schedule:

METER SIZE	TYPE	LUES
5/8" x 3/4"	positive displacement	1
3/4"	positive displacement	1.5
1"	positive displacement	2.5
1-1/2"	positive displacement	5
1-1/2"	turbine	8
2"	positive displacement	8
2"	turbine	10
3"	compound	16
3"	turbine	24
4"	compound	25
4"	turbine	42
6"	compound	50
6"	turbine	92
8"	compound	80
8"	turbine	160
10"	compound	115
10"	turbine	250
12"	turbine	330
6" x 2"	fire service	based on domestic demand
8" x 2"	fire service	based on domestic demand
10" x 2"	fire service	based on domestic demand

The LUE is determined on the basis of the American Water Works Association (AWWA) standards C700-02, C701-02 and C702-01 recommended maximum rate for continuous duty (flow) of the meter purchased at sale of tap. The LUE or "service unit" is well accepted and it is extraordinarily easy to calculate at time of fee collection (at sale of taps or during the building permit application process). In addition, it is based on criteria that directly reflect the differences in service consumption and capacity requirements between different users. One of the best benefits of using meter type and size for determining number of service units is that the owner makes the decision based on his or her real needs.

The projection of LUEs are dependent on the size, type and number of meters sold, while the basis for the forecasts are population converted to water and wastewater flows.

The projections assumed that by calculating the number of LUEs in the water system today and assuming the relationship between LUEs and projected usage would remain constant in the future.

Water LUE Equivalency:
The average flow per LUE can be used to establish land-use equivalency factors. The current 2014 water treatment plant peak and average daily flows have been reviewed as well as the wastewater treatment plant flows. The flows have increased slightly and the yield of residents per LUE has increased. The net effect is little or no change to the estimated gallons per LUE for water or wastewater.

For residential use, we have held the water use of 334 gallons per day per service unit (based on historical information and rounded up) divided by an average flow per capita of 145 gallons per capita per day (residential use divided by population for the ten-year period) yields 2.3 residents per LUE.

The only measurement of land use that are used in the calculation of capacity, LUEs, and impact fee is residential population.

WATER SYSTEM LUE
FOR A TEN-YEAR PERIOD

LUEs	Average Number of Residents	Average Number of Gallons/Day Water Use
1	2.3	334

Meter size selection usually involves a count of water-using fixtures and an analysis of the number of fixtures that may be used at one time, calculated by a builder, engineer or architect. The result is a determination of the flow characteristics of a structure, or other facility relating the land use, to continuous and maximum flow requirements, which in turn are compared against meter flow ratings to select a meter size. Thus, a given meter size reflects a user-defined level of use or consumption in terms of flow. The average daily flow of one LUE, defined above, is chosen as the basis of consumption in this analysis so that every customer charged an impact fee will be placed on a uniform, flow-based scale.

Wastewater LUE Equivalency:

For residential use, we have held the wastewater use of 420,000 gallons per day through the wastewater treatment plant (based on historical information and rounded up) and divided by the current population of 6,500 persons which yields an average flow per capita of 64.61gallons. Holding he average number of residents per LUE at 2.3 (same as for water) 64.61 gallons per capita per day times 2.3 residents per LUE yields approximately 149 gallons per day per LUE.

WASTEWATER SYSTEM LUE
FOR A TEN-YEAR PERIOD

LUEs	Average Number of Residents	Average Number of Gallons/Day Wastewater Use
1	2.3	149

LUE Conversion Factors:

The foregoing basic LUE definitions are specific to particular terms for relating magnitude and duration of flow, average daily pumpage in the case of water LUEs and the average daily flow for wastewater. Utility facilities are sized using TCEQ design flow criteria. To calculate the capacity of a given facility in LUEs the basic LUE value must be converted to the necessary design flow basis for that type of facility using the appropriate TCEQ factor.

V. LUE DEMAND PROJECTIONS

The Land Use Assumptions provide the foundation for estimating the cost of capital improvements attributable to new growth by making it possible to quantify the demand for service from those improvements. The population has been uniformly projected at 4.67% per annum and distributed uniformly within the City Limits and the City's extraterritorial jurisdiction.

Land use data are expressed in LUEs by water pressure zones and wastewater drainage areas to quantify demand by subarea. Spreadsheet models for 2014 and 2024 were interpolated to produce demand sets at the beginning and end of the ten-year planning period.

Demand projections describing the impact fee project subareas are presented in Tables 4 and 5. Most water pressure zones include impact fee projects; and since they do not overlap, the ten-year growth summed by zones equals the system-wide growth total. Accounting for the growth of LUEs in wastewater project drainage areas is more complex, since the drainage area of one interceptor project may be a subset of a downstream interceptor project drainage area. For example, the MacArthur Lift Station project drainage area is a subset of the San Carlo Lift Station project drainage area. LUE totals for the wastewater treatment plant are presented to indicate a system-wide total.

VI. CAPACITY AND COST ATTRIBUTABLE TO NEW GROWTH

Water and Wastewater Capacity and Costs

Tables 2 and 3 present the capacity and cost attributable to new growth according to the impact fee methodology outlined in Section III. The cost used in the impact fee calculation is simply the cost per LUE multiplied by the ten-year growth in LUEs derived from the land use assumptions for the subarea service by each set of facilities.

The percentage of utilized capacity was calculated for each CIP project. The utilized capacity during the Impact Fee period is estimated for the year 2024 capacity requirements. The utilized capacity for each water and wastewater facility, both existing and proposed, is presented in detail in Impact fee Capacity Calculation Tables Nos. 4 and 5.

Cost to Build

The cost to build a given facility includes the cost to the City for land acquisition, engineering and construction, along with related cost components. The cost is listed in dollars and excludes interest.

Interest Cost

The law allows interest cost to be added into the cost of a project if the impact fee will be used to repay both principal and interest. The amount of debt service assigned to each project was calculated by using the following assumptions: all bonds for the selected impact fee capital improvements projects were sold at the same time, and interest rate of 6.0% was assumed and the term of the bonds was twenty years. The amount of interest cost is indicated in thousands of dollars.

Summary of Eligible Cost from Table 2

Water System Facility	Project Cost
Existing Water System Bond Projects	$ 1,469,507
Proposed Water Treatment	$ 24,145,578
Proposed Pumping, Storage	$ 5,527,330
Proposed Transmission/Distribution Lines	$ 4,466,200
Total	**$ 35,608,615**

Summary of Eligible Cost from Table 3

Wastewater System Facility	Project Cost
Existing Wastewater System Bond Projects	$ 11,799,395
Proposed Wastewater Facilities	$ 6,107,855
Total	**$ 17,907,250**

STATE OF TEXAS
GARY C. GRAHAM JR.
52080
LICENSED
PROFESSIONAL ENGINEER
2-10-16

VII. CALCULATION OF MAXIMUM ALLOWABLE IMPACT FEE

The total system-wide impact costs for all pressure zones and all drainage areas are determined by simply summing the impact costs of the individual subareas. (Note that these summations can be found in Tables 2 and 3.)

The maximum impact fees for the water and wastewater systems are calculated separately by dividing the cost of the capital improvements or facility expansions necessitated and attributable to new development in the service area within the ten year period by the number of living units anticipated to be added to City within the ten year period.

STATE OF TEXAS
GARY C. GRAHAM JR.
52080
LICENSED
PROFESSIONAL ENGINEER
2-10-16

The water system impact fee is calculated as follows:

$$\text{Maximum Impact Fee} = \frac{\text{Eligible Existing Facility Cost} + \text{Eligible Proposed Facility Cost}}{\text{Number of New Living Unit Equivalent over the Next 10-Years}}$$

$$= \frac{\$\ 1{,}469{,}507 + \$\ 34{,}169{,}108}{4{,}233} = \frac{\$\ 35{,}608{,}615}{4{,}233}$$

Water Maximum Impact Fee = $ 8,412 *

* Maximum Allowable Water Impact Fee is 50% of the Calculated Water Maximum Impact Fee.

Maximum Allowable Water Impact Fee = $8,412 x 50% = <u>$4,206</u>

The wastewater system impact fee is calculated as follows:

$$\text{Maximum Impact Fee} = \frac{\text{Eligible Existing Facility Cost} + \text{Eligible Proposed Facility Cost}}{\text{Number of New Living Unit Equivalent over the Next 10-Years}}$$

$$= \frac{\$\ 11{,}799{,}395 + \$\ 6{,}107{,}855}{4{,}233} = \frac{\$\ 17{,}907{,}250}{4{,}233}$$

Wastewater Max. Impact Fee = $ 4,230 *

* Maximum Allowable Wastewater Impact Fee is 50% of the Calculated Wastewater Maximum Impact Fee.

Maximum Allowable Wastewater Fee = $4,230 x 50% = <u>$2,115</u>

VIII. IMPACT FEE ASSESSMENT

The Texas Impact Fee Act (Section 395.016 of the Texas Local Government Code) provides that the impact fees must be assessed on all property no later than the time of application for a building permit and tap purchase.

Since 2001 the Impact Fee Ordinance has included an "assessed fee" separate from the maximum allowable and collected fees. The "assessed fees" have remained constant since 2001 at $1,250 for water per LUE and $1,250 for wastewater per LUE.

Local Cities currently charge the following Impact Fees:

	Water	Wastewater
Leander	$ 3,880.00	$ 1,615.00
Cedar Park	$ 2,250.00	$ 2,000.00
Marble Falls	$ 853.82	$ 256.46
Jonestown	$ N/A*	$ N/A*

* Based on review of the official City website, Jonestown Water Supply Corporation is not affiliated with any municipality or taxing district and does not currently charge a water Impact Fee.

* Jonestown does not currently have wastewater treatment capabilities, and thus does not charge wastewater Impact Fee.

IX. COLLECTED FEES

The fees actually collected at the time of tap sale may be set by ordinance at any amount equal to or lower than the maximum allowable fees

The fees adopted are assessed in accordance with the Texas Impact Fee Act (Section 395.016 of the Texas Local Government Code) to all taps sold in accordance with the City adopted fee structure.

Since 2001, the collected impact fee has been established at a rate lower than the maximum allowable calculated fee.

IMPACT FEE REPORTS

LIST OF TABLES, FIGURES AND ATTACHMENTS

IMPACT FEE CAPITAL IMPROVEMENTS PLAN

	PAGE
MAP 1 – City of Lago Vista, TX, City Limits and ETJ	24
TABLE 1 – LUEs Associated With Meter Size and Type	15
TABLE 2 - Water System Costs	25
TABLE 3 - Wastewater System Costs	29
TABLE 4 - Water System Model	31
TABLE 5 - Wastewater System Model	37
TABLE 6 – Population Estimates / Projections Data	43
FIGURE 1 – Water Flow Diagram	44
FIGURE 2 – Wastewater Flow Diagram	46
ATTACHMENT 1 – The Community Impact Fee Ordinance	48

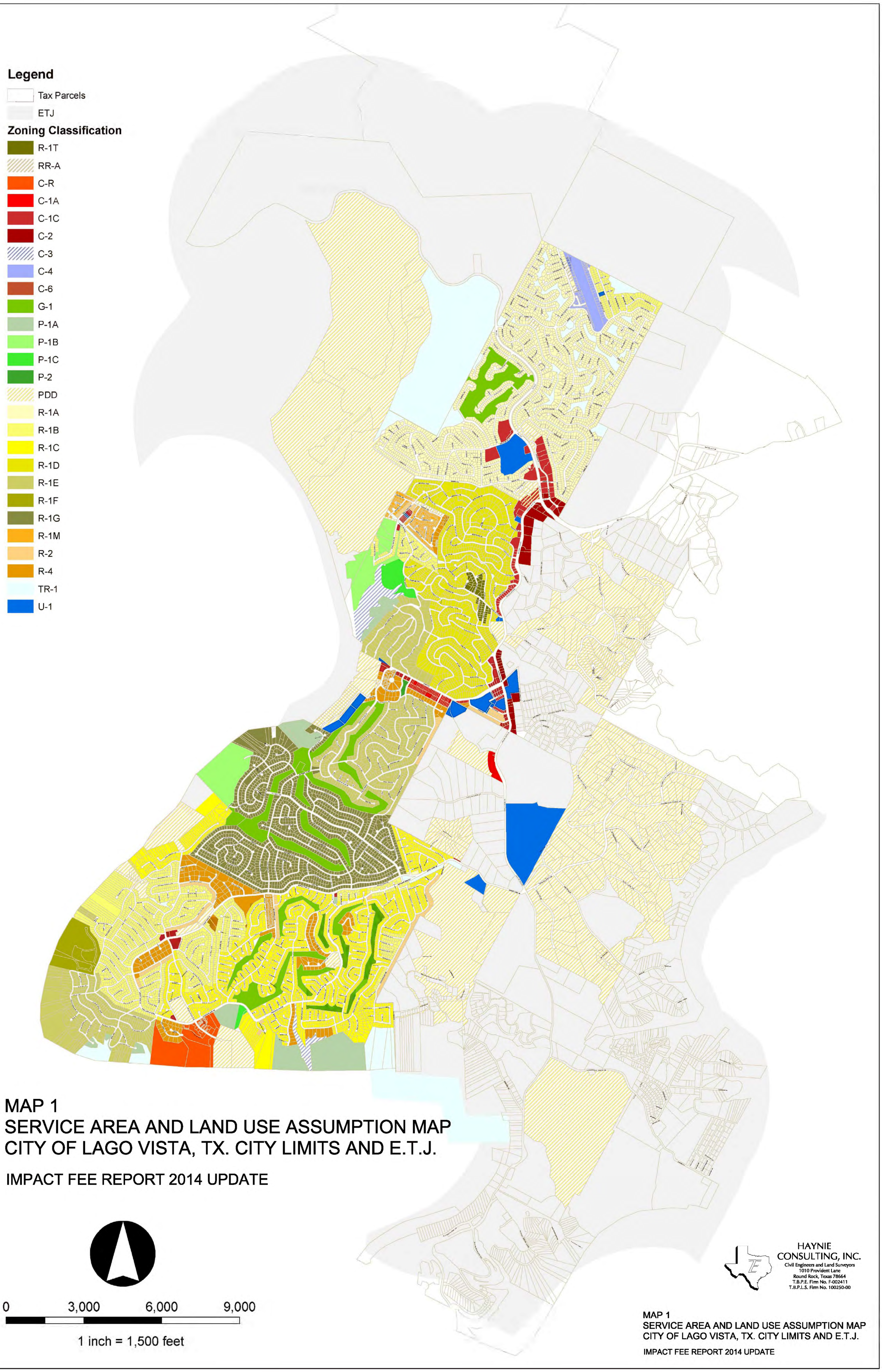

MAP 1
SERVICE AREA AND LAND USE ASSUMPTION MAP
CITY OF LAGO VISTA, TX. CITY LIMITS AND E.T.J.

IMPACT FEE REPORT 2014 UPDATE

MAP 1
SERVICE AREA AND LAND USE ASSUMPTION MAP
CITY OF LAGO VISTA, TX. CITY LIMITS AND E.T.J.

IMPACT FEE REPORT 2014 UPDATE

EXISTING WATER FACILITIES - WATER SYSTEM COSTS

				Improvement Cost ($)				Capacity Utilized (%)			Capacity Utiltized ($)		
C.O. Issue	Improvements	Year Const.	Projected Capacity	Construction, Engineering & Testing	Debt Service Interest Rate %	Total Debt Service	Total Project Cost $	2014	2024	During Fee Period	2014	2024	During Fee Period
1999	12" W.L. from Lohman B.P.S. to Bar-K Ranch Road		1400 GPM	468,750	4.68	296,719	765,469	30%	100%	70%	229,641	765,469	535,828
1999	12" & 16" W.L./WTP-1 to Allegiance EST	2001	1400 GPM	759,768	4.68	480,933	1,240,701	30%	100%	70%	372,210	1,240,701	868,491
2006	Bronco GST	2008	240,000 Gals	215,000	4.13	110,940	325,940	20%	40%	20%	65,188	130,376	65,188
*	GST at WTP #1 REPAIR	2009	200,000 Gals										
*													
*													
*	Hollows GST & Booster Station												
*	Hollows EST & GTS												
				(0.63 multiplier for 6%)						EXISTING WATER TOTAL THIS SHEET			1,469,507

Legend

*	City oversizing participation in developer facilities
W.L.	Water Line
WTP	Water Treatment Plant
BPS	Booster Pump Station
GST	Ground Storage Tank
EST	Elevated Storage Tank
P.P.	Pressure Plane
K	Thousand
WWTP	Wastewater Treatment Plant
L.S.	Lift Station
F.M.	Force Main

STATE OF TEXAS
GARY C. GRAHAM JR.
52080
LICENSED
PROFESSIONAL ENGINEER
2-10-16

TABLE 2
1 OF 4
CAPITAL IMPROVEMENT PLAN
EXISTING IMPROVEMENTS
WATER FACILITIES
CITY OF LAGO VISTA

HAYNIE CONSULTING, INC

PROPOSED WATER FACILITIES - WATER SYSTEM COSTS

					Pump Station Cost ($)					Capacity Utilized (%)			Capacity Utiltized ($)		
Project No.	Pump Station and/or Storage Tank Improvements	Year Const.	Projected Capacity	Units	Const.	Engineering & Testing	Debt Service Interest Rate %	Total Debt Service	Total Project Cost $	2014	2024	During Fee Period	2014	2024	During Fee Period
NORTH	**WTP # 1**														
	BPS Airport Water P.P.	2016	600	gpm	950,000	100,000	6%	661,500	1,711,500	0	70%	70%	0	1,198,050	1,198,050
	GST at Cedar Ridge	2020	200,000	gals	400,000	60,000	6%	289,800	749,800	0	80%	80%	0	599,840	599,840
	BPS to Cedar Rdg & Lohmans	2020	2,100	gpm	1,500,000	180,000	6%	1,058,400	2,738,400	0	90%	90%	0	2,464,560	2,464,560
SOUTH	**WTP # 3**														
	Golf Ball P.P.														
	EST Mount Vernon	2024	200,000	gals	900,000	100,000	6%	630,000	1,630,000	0	50%	50%	0	815,000	815,000
	GST Mount Vernon	2024	200,000	gals	400,000	60,000	6%	289,800	749,800	0	60%	60%	0	449,880	449,880
						(0.63 multiplier for 6%)						**PROPOSED WATER TOTAL THIS SHEET**			**5,527,330**

Legend:

*	City oversizing participation in developer facilities
W.L.	Water Line
WTP	Water Treatment Plant
BPS	Booster Pump Station
GST	Ground Storage Tank
EST	Elevated Storage Tank
P.P.	Pressure Plane
K	Thousand
WWTP	Wastewater Treatment Plant
L.S.	Lift Station
F.M.	Force Main

TABLE 2
2 OF 4
CAPITAL IMPROVEMENT PLAN
PROPOSED IMPROVEMENTS
WATER FACILITIES
CITY OF LAGO VISTA

HAYNIE CONSULTING, INC

PROPOSED WATER FACILITIES - WATER SYSTEM COSTS

Pipeline Improvements (Location)	Length (Ft.)	Diameter (Inches)	Date of Const.	Avg. Unit Cost ($/Ft.)	Total Capital Cost ($)	Debt Service Interest Rate %	Total Debt Service	Total Project Cost $	(%) Utilized Capacity			($) Utilized Capacity		
									2014	2024	During Fee Period	2014	2024	During Fee Period
North (WTP #1)														
PL-1														
Lohmans to Bronco	12,000	12	2020		1,080,000	6%	680,400	1,760,400	0%	50%	50%	0	880,200	880,200
from Lohmans to Cdr Rdg	2,000	16	2020		250,000	6%	157,500	407,500	0%	80%	80%	0	326,000	326,000
*WTP 1 to Cedar Ridge GST	6,900	12 & 20	2020		800,000	6%	504,000	1,304,000	0%	50%	50%	-	652,000	652,000
South (WTP #3)														
Lower PP Mount Vernon		12	2024		300,000	6%	189,000	489,000	0%	50%	50%	0	489,000	489,000
from WTP to Lohmans		20	2024		800,000	6%	504,000	1,304,000	0%	50%	50%	0	1,304,000	1,304,000
from Lohmans (along Lohmans)														
to Keegan Crossing	5,000	12	2016		500,000	6%	315,000	815,000	0%	50%	50%	0	815,000	815,000
					(0.63 multiplier for 6%)							**PROPOSED WATER TOTAL THIS SHEET**		**4,466,200**

Pipeline from Lohmans BPS (Lohmans BPS) to Kelly's Corners along Lohmans

Policy min. 8" WL or size above 8" reimburseable through rebate on impact fees

Legend:

*	City oversizing participation in developer facilities
W.L.	Water Line
WTP	Water Treatment Plant
BPS	Booster Pump Station
GST	Ground Storage Tank
EST	Elevated Storage Tank
P.P.	Pressure Plane
K	Thousand
WWTP	Wastewater Treatment Plant
L.S.	Lift Station
F.M.	Force Main

TABLE 2
3 OF 4
CAPITAL IMPROVEMENT PLAN
PROPOSED IMPROVEMENTS
WATER FACILITIES
CITY OF LAGO VISTA

HAYNIE CONSULTING, INC

PROPOSED WATER FACILITIES - WATER SYSTEM COSTS

					Proposed Water Facilities Cost ($)					Capacity Utilized (%)			Capacity Utiltized ($)		
Serves	WTP Improvements	Year Const.	Projected Capacity	Units	Const.	Engineering & Testing	Debt Service Interest Rate %	Total Debt Service	Total Project Cost $	2014	2024	During Fee Period	2014	2024	During Fee Period
South	WTP No. 3 (under construction)	2014	2	MGD	9,900,000	1,100,000	6%	6,930,000	17,930,000	0%	100%	100%	0	17,930,000	17,930,000
	includes Lake intake clearwell and BPS														
South	WTP No. 3 expansion	2020	3	MGD	8,666,450	866,645	6%	6,005,850	15,538,945	0%	40%	40%	0	6,215,578	6,215,578
	includes Lake intake clearwell and BPS														
														TOTAL THIS SHEET	24,145,578
														TOTAL SHEET 1	1,469,507
														TOTAL SHEET 2	5,527,330
														TOTAL SHEET 3	4,466,200
						(0.63% multiplier for 6%)									
														PROPOSED TOTAL WATER IMPROVEMENTS	35,608,615

WTP No. 3 (Serves South of Dawn Drive)

Existing LUE's =	2,508	1,505	gpm
Proposed WTP Capacity (2.0 mgd) =		1,389	gpm
Old Lago Vista 10-Yr Projected =		3,440	LUE's
Planned Development 10-Yr Projected =		1,040	LUE's
2024 Req'd Capacity =		4,481	LUE's
equals		2,688	gpm
WTP Demand		3.87	MGD
2014 WTP Capacity		2.0	MGD
Add WTP Capacity		3.0	MGD
2024 Proposed WTP Capacity		5.0	MGD

WTP No. 1 (Serves North of Dawn Drive)

Existing LUE's =	1,043	626	gpm
Existing WTP Capacity (2.5-mgd) =		1,736	gpm
Old Lago Vista 10-Yr Projected =		1,431	LUE's
Planned Development 10-Yr Projected =		1,873	LUE's
2024 Req'd Capacity =		3,303	LUE's
equals		1,982	gpm
WTP Demand		2.85	MGD
2014 WTP Capacity		2.0	MGD
Add WTP Capacity		0.0	MGD
2024 Proposed WTP Capacity		2.0	MGD

7,784

Water Total Cost per New LUE

Calculation: $35,608,615 (Proposed Total Water Improvements)
4,233 LUE's (Increase Projection, Page 6)
$ 8,412 Calculated Maximum

Maximum Fee Set At 50% (Per Paragraph 2, Pg 12)

Equals $ 4,206 (Referenced On Page 4)

* (1) Projections are based on 4.67% increase per year over 10 years = 46.7%

7.00 MGD 2024 WTP 1+3 CAPACITY
6.73 MGD 2024 REQ'D CAPACITY
Check: 2024 WTP CAPACITY OKAY!

Legend:

*	City oversizing participation in developer facilities
W.L.	Water Line
WTP	Water Treatment Plant
BPS	Booster Pump Station
GST	Ground Storage Tank
EST	Elevated Storage Tank
P.P.	Pressure Plane
K	Thousand
WWTP	Wastewater Treatment Plant
L.S.	Lift Station
F.M.	Force Main

STATE OF TEXAS
GARY C. GRAHAM JR.
52080
LICENSED
PROFESSIONAL ENGINEER
Gary Graham
2-10-16

TABLE 2
4 OF 4
CAPITAL IMPROVEMENT PLAN
PROPOSED IMPROVEMENTS
WATER FACILITIES
CITY OF LAGO VISTA

HAYNIE CONSULTING, INC

EXISITNG WASTEWATER FACILITIES - WASTEWATER SYSTEM COSTS

C.O. Issue	Improvements	Year Const.	Projected Capacity	Improvement Cost ($)				Capacity Utilized (%)			Capacity Utilized ($)		
				Construction, Engineering & Testing	Debt Service Interest Rate %	Total Debt Service	Total Project Cost $	2014	2024	During Fee Period	2014	2024	During Fee Period
1996	Wastewaster Treatment Plant Effluent Pond	2003	14 MG	1,703,167	5.50	1,078,105	2,781,272	60%	100%	40%	1,668,763	2,781,272	1,112,509
1999	Turner Lift Station	2007	2.0 MGD	495,000	4.68	313,335	808,335	60%	100%	40%	485,001	808,335	323,334
2000	(2) Boone Drive Lift Stations		0.5 MGD	523,277	5.46	464,147	987,424	50%	90%	40%	493,712	888,681	394,969
2000	Wastewater Treatment Plant #2	2003	1.0 MGD	3,167,490	5.46	2,809,564	5,977,054	70%	100%	30%	4,183,938	5,977,054	1,793,116
2000	Cedar Breaks Effluent Transmission Line	2003	1.0 MGD	1,658,476	5.46	1,471,068	3,129,544	50%	90%	40%	1,564,772	2,816,590	1,251,818
2000	Cedar Breaks Effluent Booster Pump Station	2003	1.0 MGD	604,603	5.46	536,283	1,140,886	50%	90%	40%	570,443	1,026,797	456,354
2003	Cedar Breaks Effluent Pond	2003	20 MG	1,470,329	4.32	802,800	2,273,129	50%	100%	50%	1,136,564	2,273,129	1,136,564
2003	Cedar Breaks Irrigation System	2003	1.0 MGD	1,344,966	4.32	734,351	2,079,317	50%	100%	50%	1,039,659	2,079,317	1,039,659
2003	Cedar Breaks Property Acquisition	2003	312 Acres	2,134,513	4.32	1,165,444	3,299,957	50%	100%	50%	1,649,979	3,299,957	1,649,979
2003	Cedar Breaks Permits	2003	-	53,633	4.32	29,284	82,917	50%	100%	50%	41,458	82,917	41,458
2006	Land Acquisition Effluent Irrigation (LV GC)	2008	150 Acres	1,700,000	4.13	877,200	2,577,200	50%	100%	50%	1,288,600	2,577,200	1,288,600
2006	High Drive Lift Station	2008	600 GPM	593,000	4.13	305,988	898,988	60%	100%	40%	539,393	898,988	359,595
2006	* Cedar Glen Wastewater Line Oversizing	2008	646 GPM	150,000	4.13	77,400	227,400	0%	60%	60%	0	136,440	136,440
	Land Acquisition Effluent Irrigation (HL GC)	2010	150 Acres	1,000,000	6	630,000	1,630,000	50%	100%	50%	815,000	1,630,000	815,000
												TOTAL THIS PAGE	**11,799,395**
				(0.63 multiplier for 6%)									

Legend:

*	City oversizing participation in developer facilities
W.L.	Water Line
WTP	Water Treatment Plant
BPS	Booster Pump Station
GST	Ground Storage Tank
EST	Elevated Storage Tank
P.P.	Pressure Plane
K	Thousand
WWTP	Wastewater Treatment Plant
L.S.	Lift Station
F.M.	Force Main

TABLE 3
SHEET 1 OF 2
CAPITAL IMPROVEMENT PLAN
EXISTING IMPROVEMENTS
WASTEWATER FACILITIES
CITY OF LAGO VISTA

HAYNIE CONSULTING, INC

PROPOSED WASTEWATER FACILITIES - WASTEWATER SYSTEM COSTS

Project No.	Improvements	Year Const.	Projected Capacity	Improvement Cost ($)					Capacity Utilized (%)			Capacity Utilized ($)		
				Construction	Engineering & Testing	Debt Service Interest Rate %	Total Debt Service	Total Project Cost $	2014	2024	During Fee Period	2014	2024	During Fee Period
	Effluent Irrigation Major System Expansion	2020	0.5 MGD	1,650,000	176,000	6.00%	1,150,380	2,976,380	0%	100%	100%	0	2,976,380	2,976,380
	Mac Arthur L.S. Replace	2020	560 gpm	880,000	88,000	6.00%	609,840	1,577,840	50%	80%	30%	788,920	1,262,272	473,352
	Omaha L.S. Repace	2020	100 gpm	250,000	16,500	6.00%	167,895	434,395	40%	80%	40%	173,758	347,516	0
	Coves L.S. Replace	2020	100 gpm	250,000	16,500	6.00%	167,895	434,395	40%	80%	40%	173,758	347,516	0
	Truman L.S. Rehab	2020	240 gpm	110,000	16,500	6.00%	79,695	206,195	50%	80%	30%	103,098	164,956	61,859
	Hancock L.S.	2020	100 gpm	550,000	66,000	6.00%	388,080	1,004,080	0%	40%	40%	0	401,632	401,632
	Harrison Cove L.S.	2020	100 gpm	660,000	77,000	6.00%	464,310	1,201,310	0%	40%	40%	0	480,524	480,524
	Hancock/Harrison F.M.	2020	4" @ 100 gpm	440,000	44,000	6.00%	304,920	788,920	0%	40%	40%	0	315,568	315,568
	WWTP Expansion	2022	1.0 MGD	3,850,000	440,000	6.00%	2,702,700	6,992,700	0%	20%	20%	0	1,398,540	1,398,540
Dev.	WW FM Cedar Glenn to WWTP	2014	4.20 gpm											
Dev.	Effl WWL from WWTP to HL GC	2014	1.0 MGD											
Dev.	Effl. GST at HL GC	2014	0.570 MGD											
Dev.	Effl. iBPS at HL GC	2014	1750 gpm											
Dev.	Alfalfa L.S.	2014	850 gpm											
Dev.	WULA / Alfalfa F.M.	2014	850 gpm											
													TOTAL THIS PAGE	**6,107,855**
					(0.63 multiplier for 6%)								TOTAL PAGE 1	11,799,395
													TOTAL WASTEWATER IMPROVEMENTS	**17,907,250**

Legend:

*	City oversizing participation in developer facilities
W.L.	Water Line
WTP	Water Treatment Plant
BPS	Booster Pump Station
GST	Ground Storage Tank
EST	Elevated Storage Tank
P.P.	Pressure Plane
K	thousand
WWTP	Wastewater Treatment Plant
L.S.	Lift Station
F.M.	Force Main
Dev.	Developer funded - not included in fee
WULA	Western United Life

Wastewater Total Cost per LUE Calculation:

$17,907,250	(Total Wastewater this Sheet)
4,233	LUE's (Increase Projection, Pg 6)
$4,230	Calculated Maximum

Maximum fee set at 50% (per Paragraph 2, Pg 12)

EQUALS $2,115 (referenced on Page 4)

TABLE 3
SHEET 2 OF 2
CAPITAL IMPROVEMENT PLAN
PROPOSED IMPROVEMENTS
WASTEWATER FACILITIES
CITY OF LAGO VISTA

HAYNIE CONSULTING, INC

WATER SYSTEM CAPACITY CALCULATIONS - WATER SYSTEM MODEL

TCEQ Storage Calcs		WTP # 1 North of Dawn Drive				
	Service Area Description	Pressure Plane	LUE @ Buildout	Yr. 2014 Existing LUE	LUE's Projected 10-yr (4% per yr)	Yr. 2024 Total LUE
1	Talon Hydro	5, 10-B	1,358	94	38	132
2	Talon GST	5, 10-B	1,358	94	38	132
3	Talon Tank (EST)	8	70	15	6	21
4	**Talon Tank Total**	5, 8, 10-B	1,428	109	44	153
5	**Tessera mid (GST) upper (EST)**	3-B, 10-C	1,362	0	0	0
6	Bronco Pass Through	5, 8, 10-B	1,428	109	44	153
7	Bronco Tank (EST)	3-A	1,583	442	177	619
8	**Bronco Tank Total**	3-A, 5, 8, 10-B	3,011	551	220	771
9	**Hollows Tank (EST)**	3-C, 2-A (28%)	723	53	21	74
10	Bronco/Hollows Total	3-A, 3-C, 4-A, 5, 8, 10-B, 2-A(28%)	3,734	604	242	846
11	**Butler Tank (EST)**	4-A, 4-B, 4-C, 10-A, 10-B	1,644	325	130	455
12	**Lohmans Pass Through**	3-A, 3-C, 4-A, 4-B, 4-C, 5, 8, 10-B, 2-A (28%)	5,378	929	372	2,291
13	**Cedar Ridge Tank**	2-C, 2-D, 2-E, 3-B, 10-C	2,750	0	685	685
14	WTP#1 Clearwell Pass Through	All above (Pass Through)	8,128	929	1,057	1,986
15	WTP#1 Clearwell (EST)	2-A (72%), 2-B	1197	489	196	685
16	Cedar Ridge/Clearwell Total	2-A (72%), 2-B, 2-C, 2-D, 2-E, 3-B, 10-C	3,947	489	196	685
17	**WTP#1 Clearwell Total**	All Above	9,325	1,418	1,252	2,670

TCEQ Storage Calcs		WTP # 1 North of Dawn Drive								
	Service Area Description	TCEQ Ground Storage (200Gals/LUE)	TCEQ Elevated Storage (100Gals/LUE)	TCEQ Hydropneumatic Storage (20Gals/LUE)	TCEQ Storage Passthru (50Gals/LUE)	Fireflow Volume (1500GPM)	Total Volume Required	Tank Volume Existing	Tank Volume Site Specific	Tank Volume Total
1	Talon Hydro	0	0	2,632	0	0	2,632	3,500		3,500
2	Talon GST	26,320	0	0	0	90,000				
3	Talon Tank (EST)	0	2,100	0	0					
4	**Talon Tank Total**						118,420	200,000		200,000
5	**Tessera mid (GST) upper (EST)**	0	0	0	0	180,000	180,000		600,000	600,000
6	Bronco Pass Through	0	0	0	7,630	180,000				
7	Bronco Tank (EST)	0	61,880	0	0					
8	**Bronco Tank Total**						249,510	240,000		240,000
9	**Hollows Tank (EST)**	0	7,420	0	0	90,000	97,420		125,000	125,000
10	Bronco/Hollows Total						346,930	240,000	125,000	365,000
11	**Butler Tank (EST)**	0	45,500	0	0	90,000	135,500		200,000	200,000
12	**Lohmans Pass Through**	0	0	0	65,030	0	65,030	240,000		240,000
13	**Cedar Ridge Tank**	0	68,500	0	0	180,000	248,500		400,000	400,000
14	WTP#1 Clearwell Pass Through	0	0	0	99,280	0	99,280	160,000		160,000
15	WTP#1 Clearwell (EST)		68,460				68,460	160000		160,000
16	Cedar Ridge/Clearwell Total						347,780	160,000	400,000	560,000
17	**WTP#1 Clearwell Total**						167,740	160,000		160,000

TCEQ Storage Calcs		WTP # 1 North of Dawn Drive							
	Service Area Description	Yr. 2014 Existing LUE	Yr. 2014 Existing Volume	Yr. 2014 Required Volume	Yr. 2014 Excess (Deficiency)	Yr. 2024 Projected LUE	Yr. 2024 Existing and Site Specific Volume	Yr. 2024 Required Volume	Yr. 2024 Excess (Deficiency)
1	Talon Hydro	94	3,500	1,880	1,620	132	3,500	2,632	868
2	Talon GST	94				132			
3	Talon Tank (EST)	15				21			
4	**Talon Tank Total**	109	200,000	110,300	89,700	153	200,000	118,420	81,580
5	**Tessera mid (GST) upper (EST)**	0			0	0	600,000	180,000	420,000
6	Bronco Pass Through	109				153			
7	Bronco Tank (EST)	442				619			
8	**Bronco Tank Total**	551	240,000	229,650	10,350	771	240,000	249,510	(9,510) *
9	**Hollows Tank (EST)**	53	125,000	95,300	29,700	74	125,000	97,420	27,580
10	Bronco/Hollows Total	604	365,000	324,950	40,050	846	365,000	346,930	18,070
11	**Butler Tank (EST)**	325	200,000	122,500	77,500	455	200,000	135,500	64,500 *
12	**Lohmans Pass Through**	929	240,000	226,450	13,550	2,291	240,000	114,550	125,450
13	**Cedar Ridge Tank**	0				685	400,000	248,500	151,500
14	WTP#1 Clearwell Pass Through	929				1,986			
15	WTP#1 Clearwell (EST)	489				685			
16	Cedar Ridge/Clearwell Total	489				685	560,000	236,240	323,760
17	**WTP#1 Clearwell Total**	1,418	160,000	95,350	64,650	2,670	160,000	167,740	(7,740) *

* Include in Fee Period

Assumption:
1. Growth is uniform over City.
2. From 2008 to 2014 growth rate at 1.0% per year.
3. Growth rate projected at 4.67% from 14 to 24.

TABLE 4
1 OF 6
CAPITAL IMPROVEMENT PLAN
FOR WATER FACILITIES
NORTH OF DAWN DRIVE
CITY OF LAGO VISTA

HAYNIE CONSULTING, INC

WATER SYSTEM CAPACITY CALCULATIONS - WATER SYSTEM MODEL

TCEQ Pumping Calcs		WTP # 1 North of Dawn Drive			
	Service Area Description	Pressure Plane	Yr. 2014 Existing LUE	LUE's Projected 10-yr (4% per yr)	2024 Total LUE
18	Talon Tank to Talon Hydro (see 1,2)	8	94	38	132
19	Bronco Tank to Talon Tank (see 4)	5, 8	109	44	153
20	Tessera mid (GST) upper (EST) (see 5)	3-B, 10-C	0	0	0
21	Lohmans Tank to Bronco Tank (see 8)	3	551	220	771
22	Lohmans Tank to Hollows Tank (see 9)	4-A, 2-A (28%)	53	21	74
23	Lohmans to Hollows/Bronco (see 10)	3, 4-A, 2-A (28%)	604	242	846
24	Lohmans Tank to Butler Tank (see 11)	10-A, 10-B	325	130	455
25	WTP#1 to Lohmans Tank (see 12)	2-A, 2-B	929	372	1,301
26	WTP#1 to Cedar Ridge Tank (see 13)	2-A (72%), 2-B, 2-C, 2-D, 3-B, 10-C	0	812	812
27	WTP#1 to Cedar Ridge and Lohmans	All Above	929	372	2,113

TCEQ Pumping Calcs		WTP # 1 North of Dawn Drive				
	Service Area Description	TCEQ Required Total Pumping 2GPM/LUE	Pumps Existing	Pumps Site Specific	Pumps Quantity	Pumps Total
18	Talon Tank to Talon Hydro (see 1,2)	263	460	0	2	460
19	Bronco Tank to Talon Tank (see 4)	305	360	0	2	360
20	Tessera mid (GST) upper (EST) (see 5)	0	0	2,800	2	2,800
21	Lohmans Tank to Bronco Tank (see 8)	1,543	800	0	4	800
22	Lohmans Tank to Hollows Tank (see 9)	148	0	1,000	4	1,000
23	Lohmans to Hollows/Bronco (see 10)	1,691	800	1,000	4	1,800
24	Lohmans Tank to Butler Tank (see 11)	910	600	1,000	4	1,600
25	WTP#1 to Lohmans Tank (see 12)	2,601	1,400	0	2	1,400
26	WTP#1 to Cedar Ridge Tank (see 13)	1,624	0	0	2	0
27	WTP#1 to Cedar Ridge and Lohmans	4,225	1,400	0	4	1,400

TCEQ Pumping Calcs		WTP # 1 North of Dawn Drive								
	Service Area Description	Yr. 2014				Yr. 2024				
		Existing LUE	Existing Pumping	Required Pumping @ 2gpm	Excess (Deficiency)	Projected LUE	Existing and Site Specific Pumping	Required Pumping @ 2gpm	Excess (Deficiency)	
18	Talon Tank to Talon Hydro (see 1,2)	94	460	188	272	132	460	263	197	
19	Bronco Tank to Talon Tank (see 4)	109	360	218	142	153	360	305	55	
20	Tessera mid (GST) upper (EST) (see 5)	0	0	0	0	0	2,800	0	2,800	
21	Lohmans Tank to Bronco Tank (see 8)	551	800	1,102	(302)	771	800	1,543	(743)	*
22	Lohmans Tank to Hollows Tank (see 9)	53	0	106	(106)	74	1,000	148	852	
23	Lohmans to Hollows/Bronco (see 10)	604	800	1,208	(408)	846	1,800	1,691		
24	Lohmans Tank to Butler Tank (see 11)	325	600	650	(50)	455	1,600	910	690	*
25	WTP#1 to Lohmans Tank (see 12)	929	1,400	1,858	(458)	1,301	1,400	2,601	(1,201)	
26	WTP#1 to Cedar Ridge Tank (see 13)	0	0	0	0	812	0	1,624	(1,624)	
27	WTP#1 to Cedar Ridge and Lohmans	929	1,400	1,858	(458)	2,113	1,400	4,225	(2,825)	*

* Include in Fee Period

TABLE 4
2 OF 6
CAPITAL IMPROVEMENT PLAN
FOR WATER FACILITIES
NORTH OF DAWN DRIVE
CITY OF LAGO VISTA

HAYNIE CONSULTING, INC

WATER SYSTEM CAPACITY CALCULATIONS - WATER SYSTEM MODEL

TCEQ Transmission Calcs		WTP # 1 North of Dawn Drive			
	Development Area	Pressure Plane	Yr. 2014 Existing LUE	LUE's Projected 10-yr (4% per yr)	Yr. 2024 Total LUE
28	Talon Tank to Talon Hydro (see 1,2)	8	94	38	132
29	Bronco Tank to Talon Tank (see 4)	5, 8	109	44	153
30	Tessera mid (GST) upper (EST) (see 5)	3-B, 10-C	0	0	0
31	Lohmans Tank to Bronco Tank (see 8)	3	551	220	771
32	Lohmans Tank to Hollows Tank (see 9)	4-A, 2-A (28%)	53	21	74
33	Lohmans to Hollows/Bronco (see 10)	3, 4-A, 2-A (28%)	604	242	846
34	Lohmans Tank to Butler Tank (see 11)	10-A, 10-B	325	130	455
35	WTP#1 to Lohmans Tank (see 12)	2-A, 2-B	929	372	1,301
36	WTP#1 to Cedar Ridge Tank (see 13)	2-A (72%), 2-B, 2-C, 2-D, 3-B, 10-C	0	812	812
			929		

TCEQ Transmission Calcs		WTP # 1 North of Dawn Drive					
	Development Area	TCEQ Required Total Transmission 1.25GPM/LUE	Q ft^3/LUE	A required for 5fps	Pipes Required Size	Existing	Site Specific
28	Talon Tank to Talon Hydro (see 1,2)	165	0.367	0.073	0	6	
29	Bronco Tank to Talon Tank (see 4)	191	0.425	0.085	0	8	
30	Tessera mid (GST) upper (EST) (see 5)	0	0.000	0.000	0		20
31	Lohmans Tank to Bronco Tank (see 8)	964	2.149	0.430	0	12	
32	Lohmans Tank to Hollows Tank (see 9)	93	0.207	0.041	0	12	
33	Lohmans to Hollows/Bronco (see 10)	1,057	2.355	0.471	0		
34	Lohmans Tank to Butler Tank (see 11)	569	1.267	0.253	0	12	
35	WTP#1 to Lohmans Tank (see 12)	1,626	3.622	0.724	0	8	16
36	WTP#1 to Cedar Ridge Tank (see 13)	1,015	2.262	0.452	0		20

TCEQ Transmission Calcs		WTP # 1 North of Dawn Drive					
	Development Area			Yr. 2014			
		Existing LUE	Existing Piping (Diameter)	Existing Piping (C/S Area)	Existing Piping (C/S Area Req for 5 fps)	Excess (Deficiency)	Recommended Piping
28	Talon Tank to Talon Hydro (see 1,2)	94	6	0.196	0.052	0.144	
29	Bronco Tank to Talon Tank (see 4)	109	8	0.349	0.061	0.288	
30	Tessera mid (GST) upper (EST) (see 5)	0		0.000	0.000	0.000	
31	Lohmans Tank to Bronco Tank (see 8)	551	12	0.785	0.307	0.478	
32	Lohmans Tank to Hollows Tank (see 9)	53	12	0.785	0.030	0.755	
33	Lohmans to Hollows/Bronco (see 10)	604		0.000	0.336	(0.336)	
34	Lohmans Tank to Butler Tank (see 11)	325	12	0.785	0.181	0.604	
35	WTP#1 to Lohmans Tank (see 12)	929	8	0.349	0.517	(0.169)	
36	WTP#1 to Cedar Ridge Tank (see 13)	0		0.000	0.000	0.000	

TCEQ Transmission Calcs		WTP # 1 North of Dawn Drive					
	Development Area			Yr. 2024			
		Projected LUE	Existing and Proposed Piping (Diameter)	Existing Piping (C/S Area)	Existing Piping (C/S Area Req for 5 fps)	Excess (Deficiency)	Recommended Piping
28	Talon Tank to Talon Hydro (see 1,2)	132	6	0.196	0.073	0.123	
29	Bronco Tank to Talon Tank (see 4)	153	8	0.349	0.085	0.264	
30	Tessera mid (GST) upper (EST) (see 5)	0	20	2.181	0.000	2.181	
31	Lohmans Tank to Bronco Tank (see 8)	771	12	0.785	0.430	0.355	12 *
32	Lohmans Tank to Hollows Tank (see 9)	74	12	0.785	0.041	0.744	
33	Lohmans to Hollows/Bronco (see 10)	846		0.000	0.471	(0.471)	
34	Lohmans Tank to Butler Tank (see 11)	455	12	0.785	0.253	0.532	
35	WTP#1 to Lohmans Tank (see 12)	1,301	8	0.349	0.724	(0.376)	
36	WTP#1 to Cedar Ridge Tank (see 13)	812	20	2.181	0.452	1.728	

* Include in Fee Period

TABLE 4
3 OF 6
CAPITAL IMPROVEMENT PLAN
FOR WATER FACILITIES
NORTH OF DAWN DRIVE
CITY OF LAGO VISTA

HAYNIE CONSULTING, INC

WATER SYSTEM CAPACITY CALCULATIONS - WATER SYSTEM MODEL

TCEQ Storage Calcs		WTP # 3 South of Dawn Drive				
	Development Area	Pressure Plane	LUE @ Buildout	Yr. 2014 Existing LUE	LUE's Projected 10-yr (4% per yr)	Yr. 2024 Total LUE
1	Marshalls Hydro	9-B	100	0	100	100
2	Marshalls Tank (GST)	9-B	100	0	100	100
3	**Marshalls Tank Total**	9-B	200	0	200	200
4	Pearson Hydro	9-A, 9-C	0	0	0	0
5	Pearson Tank (GST)	9-A, 9-C	0	0	0	0
6	Pearson Tank (EST)	4-D	0	0	0	0
7	**Pearson Tank Total**	4-D, 9-A, 9-C	0	0	0	0
8	**Viking Tank (EST)**	1-B, 1-C, 1-D, 7-C, 7-D, H-Sch	2,394	0	958	958
9	**Golf Ball Tank (EST)**	1-A, 6 (1/2)	5,303	1,903	761	2,664
10	Allegiance Tank (EST)	6 (1/2), 7-A, 7-B	2,820	955	382	1,337
11	Mt Vernon Tank (EST)	incl. w/ Golf Ball EST	0	0	0	0
12	Mt Vernon GST Total	included w/ Allegiance GST	0	0	0	0
13	**WTP#1 Clearwell**	All above	10,717	2,858	2,301	5,159

TCEQ Storage Calcs		WTP # 3 South of Dawn Drive								
	Development Area	TCEQ Ground Storage (200Gals/LUE)	TCEQ Elevated Storage (100Gals/LUE)	TCEQ Hydropneumatic Storage (20Gals/LUE)	TCEQ Storage Passthru (50Gals/LUE)	Fireflow Volume (1500GPM)	Total Volume Required	Tank Volume Existing	Tank Volume Site Specific	Tank Volume Total
1	Marshalls Hydro	0	0	2,000	0		2,000		2,000	2,000
2	Marshalls Tank (GST)	20,000	0	0	0		20,000		20,000	20,000
3	**Marshalls Tank Total**	0		0	0	90,000	110,000	0	110,000	110,000
4	Pearson Hydro	0	0	0	0		0			
5	Pearson Tank (GST)	0	0	0	0		0			
6	Pearson Tank (EST)	0	0	0	0		0			
7	**Pearson Tank Total**	0	0	0	0		0			
8	**Viking Tank (EST)**	0	135,400	0	0	180,000	315,400	400,000		400,000
9	**Golf Ball Tank (EST)**	0	251,300	0	0	90,000	341,300	200,000		200,000
10	Allegiance Tank (EST)	0	126,100	0	0		126,100	282,000		282,000
11	Mt Vernon Tank (EST)	0	0	0	0		0		200,000	200,000
12	Mt Vernon GST Total	0	0	0			0	0	0	0
13	**WTP#3 Clearwell**	0	0	0	257,960		257,960	200,000		200,000

TCEQ Storage Calcs		WTP # 3 South of Dawn Drive								
	Development Area	Yr. 2014 Existing LUE	Yr. 2014 Existing Volume	Yr. 2014 Required Volume	Yr. 2014 Excess (Deficiency)	Yr. 2024 Projected LUE	Yr. 2024 Existing and Site Specific Volume	Yr. 2024 Required Volume	Yr. 2024 Excess (Deficiency)	
1	Marshalls Hydro	0			0	100		2,000		
2	Marshalls Tank (GST)	0			0	100		20,000		
3	**Marshalls Tank Total**	0			0	200		110,000		
4	Pearson Hydro	0			0	0		0	0	
5	Pearson Tank (GST)	0			0	0		0	0	
6	Pearson Tank (EST)	0			0	0		0	0	
7	**Pearson Tank Total**	0			0	0		0	0	
8	**Viking Tank (EST)**	0			0	958	400,000	315,400	84,600	
9	**Golf Ball Tank (EST)**	1,903	200,000	280,300	(80,300)	2,664	200,000	341,300	(141,300)	*
10	Allegiance Tank (EST)	955			0	1,337		126,100	(126,100)	
11	Mt Vernon Tank (EST)	0			0	0		0	0	
12	Mt Vernon GST Total	0	0		0	0		0		
13	**WTP#3 Clearwell**	2,858	200,000	142,900	57,100	5,159	200,000	257,960	(57,960)	*

* Include in Fee Period

School water = 378 LUE's at buildout

TABLE 4
4 OF 6
CAPITAL IMPROVEMENT PLAN
FOR WATER FACILITIES
SOUTH OF DAWN DRIVE
CITY OF LAGO VISTA

HAYNIE CONSULTING, INC

WATER SYSTEM CAPACITY CALCULATIONS - WATER SYSTEM MODEL

TCEQ Pumping Calcs		WTP # 3 South of Dawn Drive			
	Development Area	Pressure Plane	Yr. 2014 Existing LUE	LUE's Projected 10-yr (4% per yr)	Yr. 2024 Total LUE
14	Marshalls Tank to Marshalls Hydro	9-B	0	100	100
15	Viking Tank to Marshalls Tank	9-B	0	100	100
16	Pearson Tank to Pearson Hydro	9-A, 9-C	0	0	0
17	Viking Tank to Pearson Tank	4-D, 9-A, 9-B	0	0	0
18	Viking Tank	1-B, 1-C, 4-D, 7-C, 9-A, 9-B, 9-C	0	958	958
19	Viking Tank to Golf Ball	1-A, 6 (1/2)	1903	761	2664
20	WTP#3 to Viking EST	All Above	2858	1143	4001

TCEQ Pumping Calcs		WTP # 3 South of Dawn Drive					
	Development Area	TCEQ Pumping 2GPM/LUE	Pumps Existing	Site Specific	Quantity	Total	Pump Excess (Deficiency) GPM
14	Marshalls Tank to Marshalls Hydro	200		200		200	
15	Viking Tank to Marshalls Tank	200		200		200	
16	Pearson Tank to Pearson Hydro	0					
17	Viking Tank to Pearson Tank	0					
18	Viking Tank	1916		2,400	2	2,400	
19	VIking Tank to Golf Ball	5328	1,400		2	1,400	(3,928)
20	WTP#3 to Viking EST	8002	2,000			2,000	(6,002)

TCEQ Pumping Calcs		WTP # 3 South of Dawn Drive								
	Development Area	Yr. 2014				Yr. 2024				
		Existing LUE	Existing Pumping	Required Pumping @ 2gpm	Excess (Deficiency)	Projected LUE	Existing and Site Specific Pumping	Required Pumping @ 2gpm	Excess (Deficiency)	
14	Marshalls Tank to Marshalls Hydro	0		0	0	100	200	200	0	
15	Viking Tank to Marshalls Tank	0		0	0	100	200	200	0	
16	Pearson Tank to Pearson Hydro	0		0	0					
17	Viking Tank to Pearson Tank	0		0	0					
18	Viking Tank	0		0	0	2394	3,600	1916		
19	Viking Tank to Golf Ball	1903	1,400	3806	(2,406)	2513	1,400	5328	(3,928)	*
20	WTP#3 to Viking Tank	2858	2,000	5716	(3,716)	6268	2,000	8002	(6,002)	*

* Include in Fee Period

TABLE 4
5 OF 6
CAPITAL IMPROVEMENT PLAN
FOR WATER FACILITIES
SOUTH OF DAWN DRIVE
CITY OF LAGO VISTA

HAYNIE CONSULTING, INC

WATER SYSTEM CAPACITY CALCULATIONS - WATER SYSTEM MODEL

TCEQ Transmission Calcs	WTP # 3 South of Dawn Drive			
Development Area	Pressure Plane	Yr. 2014 Existing LUE	LUE's Projected 10-yr (4% per yr)	Yr. 2024 Total LUE
21 Marshalls Tank to Marshalls Hydro	9-B	0	100	100
22 Viking Tank to Marshalls Tank	9-B	0	100	100
23 Pearson Tank to Pearson Hydro	9-A, 9-C	0	0	0
24 Viking Tank to Pearson Tank	4-D, 9-A, 9-B	0	0	0
25 Viking Tank	1-B, 1-C, 4-D, 7-C, 9-A, 9-B, 9-C	0	2394	2394
26 Viking Tank to Golf Ball	1-A, 6 (1/2)	1795	718	2513
27 WTP#3 to Viking Tank	All Above	2696	3572	6268

TCEQ Transmission Calcs	WTP # 3 South of Dawn Drive					
Development Area	TCEQ Required Total Transmission 1.25GPM/LUE	Q ft^3/LUE	A required for 5fps	Pipes Required Size	Existing	Site Specific
21 Marshalls Tank to Marshalls Hydro	125	0.279	0.056	0		8
22 Viking Tank to Marshalls Tank	125	0.279	0.056	0		16 & 12
23 Pearson Tank to Pearson Hydro	0	0.000	0.000	0	0	
24 Viking Tank to Pearson Tank	0	0.000	0.000	0	0	
25 Viking Tank	2,993	6.668	1.334	0		16
26 Viking Tank to Golf Ball	3,141	6.999	1.400	0	16	
27 WTP#3 to Viking Tank	7,835	17.458	3.492		12	

TCEQ Transmission Calcs	WTP # 3 South of Dawn Drive					
Development Area	Existing LUE	Existing Piping (Diameter)	Yr. 2014 Existing Piping (C/S Area)	Existing Piping (C/S Area Req for 5 fps)	Excess (Deficiency)	Recommended Piping
21 Marshalls Tank to Marshalls Hydro	0		0.000	0.000	0.000	
22 Viking Tank to Marshalls Tank	0		0.000	0.000	0.000	
23 Pearson Tank to Pearson Hydro	0	0	0.000	0.000	0.000	
24 Viking Tank to Pearson Tank	0	0	0.000	0.000	0.000	
25 Viking Tank	0	0	0.000	0.000	0.000	
26 Viking Tank to Golf Ball	1795	8	0.349	1.000	(0.651)	
27 WTP#3 to Viking Tank	2696	16 & 12	1.396	1.502	(0.106)	

TCEQ Transmission Calcs	WTP # 3 South of Dawn Drive					
Development Area	Projected LUE	Existing and Proposed Piping (Diameter)	Yr. 2024 Existing Piping (C/S Area)	Existing Piping (C/S Area Req for 5 fps)	Excess (Deficiency)	Recommended Piping
21 Marshalls Tank to Marshalls Hydro	100		0.000			
22 Viking Tank to Marshalls Tank	100	12	0.785			
23 Pearson Tank to Pearson Hydro	0		0.000			
24 Viking Tank to Pearson Tank	0		0.000			
25 Viking Tank	2,394	16	1.396	1.334	0.062	
26 Viking Tank to Golf Ball	2,513		0.000	1.400	(1.400)	16 *
27 WTP#3 to Viking Tank	6,268		0.000	3.492	(3.492)	20 *

* Include in Fee Period

TABLE 4
6 OF 6
CAPITAL IMPROVEMENT PLAN
FOR WATER FACILITIES
SOUTH OF DAWN DRIVE
CITY OF LAGO VISTA

HAYNIE CONSULTING, INC

North WW Pumping - Year 2014, Wastewater System Model

Collection Basin	From Lift Station	To Lift Station	LUE Build-Out	LUE 2014	LUE 2024	2014 Existing Pumps Firm Cap. (gpm)	2014 Min. Required Pumping @ 0.5gpm/LUE (gpm)	2014 Excess (gpm) (Deficiency)	2014 Excess (LUE) (Deficiency)	2014 Comments and Recommendations	2014 Include in Fee Period
LVCCE2, Overlook Villa	I.G.P.	WWTP (ex)	125	50	71	N/A					
Shoreline Ranch	I.G.P.	**Shoreline Ranch LS#1 Total (df)**	159	-	68	None				Lift Station & FM By Developer	
Shoreline Ranch	I.G.P.	Shoreline Ranch LS#2 (df)	23	-	9	N/A					
Shoreline Ranch	Shoreline Ranch LS#1 (df)	Shoreline Ranch LS#2 (df)	159	-	68	N/A					
Shoreline Ranch		**Shoreline Ranch LS#2 Total (df)**	182	-	77	None				Lift Station & FM By Developer	
Shoreline Ranch	I.G.P.	Shoreline Ranch LS#3 (df)	131	-	56	N/A					
Shoreline Ranch	I.G.P + SRLS#1 + SRLS#2	**Shoreline Ranch LS#3 Total (df)**	313	-	133	None				Lift Station & FM By Developer	
The Hollows	I.G.P.	Hollows LS (df)	244	-	105	N/A					
		N/A	557	-	238	N/A					
	I.G.P. (Jonestown)	Hollows LS (df)	716	-	309	N/A					
	I.G.P. (Jonestown)	Hollows LS (df)	79	-	34	N/A					
		N/A	795	-	343	N/A					
		N/A	1,039	-	377	N/A					
Shoreline Ranch, Hollows	Hollows I.G.P. + SRLS#3	**Hollows LS Total (df)**	1,352	-	581	None				Lift Station & FM By Developer	
Travis Hollow, Lago Ranchos, Pearson	I.G.P.	WWTP (ex)	471	-	203	N/A					
		N/A	1,823	-	784	N/A					
BKR 14	I.G.P.	Timber Trail LS (fu)	104	-	-	None				Future Beyond Year 2024	
BKR 15	I.G.P.	Airport LS (fu)	167	-	-	None				Future Beyond Year 2024	
	Timber Trail LS	Airport LS (fu)	104	-	-	None				Future Beyond Year 2024	
BKR 11	I.G.P.	Bison Trail LS (fu)	180	-	-	None				Future Beyond Year 2024	
BKR 10	I.G.P.	Foothill Cove LS (fu)	79	-	-	None				Future Beyond Year 2024	
BKR 8	I.G.P.	Surrey Lane LS (fu)	55	-	-	None				Future Beyond Year 2024	
Most of BKR, LVE 5 & 7	I.G.P.	N/A	2,140	287	410	N/A					
BKR 4, 6, 5, 1, 2, 3, LVE 6, 4	I.G.P.	**Bar-K LS Total (ex)**	1,225	413	591	625	207	418	837		
Mahogany	I.G.P.	**Mahogany LS Total (df)**	720	-	311	None				Lift Station & FM By Developer	
Tessera	I.G.P.	**Tessera LS Total (df)**	2,030	-	876	None				Lift Station & FM By Developer	
LVE 1, 2, 3	I.G.P.	N/A	663	148	211	N/A					
All Basins Above	All Lift Stations Above	**Turner LS Total (ex)**	6,778	848	2,399	973	424	549	1098		
Sunset Harbor	I.G.P.	WWTP (ex)	288	-	83	N/A					
No Basin	Turner LS, Sunset Harbor	WWTP (ex)	7,066	848	2,482	N/A					
			125	50	71						
			1,823	-	784						
			7,066	848	2,482						
			9,014	**898**	**3,337**						
				LUEs 2024-2014=	2,439						

North WW Pumping - Year 2024, Wastewater System Model

Collection Basin	From Lift Station	To Lift Station	LUE Build-Out	LUE 2014	LUE 2024	2024 Proposed Pumps Firm Cap. (gpm)	2024 Min. Required Pumping @ 0.5gpm/LUE (gpm)	2024 Excess (gpm) (Deficiency)	2024 Excess (LUE) (Deficiency)	2024 Comments and Recommendations	2024 Include in Fee Period
LVCCE2, Overlook Villa	I.G.P.	WWTP (ex)	125	50	71	N/A					
Shoreline Ranch	I.G.P.	**Shoreline Ranch LS#1 Total (df)**	159	-	68	80	34	46	91	Lift Station & FM By Developer	
Shoreline Ranch	I.G.P.	Shoreline Ranch LS#2 (df)	23	-	9	N/A					
Shoreline Ranch	Shoreline Ranch LS#1 (df)	Shoreline Ranch LS#2 (df)	159	-	68	N/A					
Shoreline Ranch		**Shoreline Ranch LS#2 Total (df)**	182	-	77	91	39	53	105	Lift Station & FM By Developer	
Shoreline Ranch	I.G.P.	Shoreline Ranch LS#3 (df)	131	-	56	N/A					
Shoreline Ranch	I.G.P + SRLS#1 + SRLS#2	**Shoreline Ranch LS#3 Total (df)**	313	-	133	157	67	90	180	Lift Station & FM By Developer	
The Hollows	I.G.P.	Hollows LS (df)	244	-	105	N/A					
		N/A	557	-	238	N/A					
	I.G.P. (Jonestown)	Hollows LS (df)	716	-	309	N/A					
	I.G.P. (Jonestown)	Hollows LS (df)	79	-	34	N/A					
		N/A	795	-	343	N/A					
		N/A	1,039	-	377	N/A					
Shoreline Ranch, Hollows	Hollows I.G.P. + SRLS#3	**Hollows LS Total (df)**	1,352	-	581	676	291	386	771	Lift Station & FM By Developer	
Travis Hollow, Lago Ranchos, Pearson	I.G.P.	WWTP (ex)	471	-	203	N/A					
		N/A	1,823	-	784	N/A					
BKR 14	I.G.P.	Timber Trail LS (fu)	104	-	-	None				Future Beyond Year 2024	
BKR 15	I.G.P.	Airport LS (fu)	167	-	-	None				Future Beyond Year 2024	
	Timber Trail LS	Airport LS (fu)	104	-	-	None				Future Beyond Year 2024	
BKR 11	I.G.P.	Bison Trail LS (fu)	180	-	-	None				Future Beyond Year 2024	
BKR 10	I.G.P.	Foothill Cove LS (fu)	79	-	-	None				Future Beyond Year 2024	
BKR 8	I.G.P.	Surrey Lane LS (fu)	55	-	-	None				Future Beyond Year 2024	
Most of BKR, LVE 5 & 7	I.G.P.	N/A	2,140	287	410	N/A					
BKR 4, 6, 5, 1, 2, 3, LVE 6, 4	I.G.P.	**Bar-K LS Total (ex)**	1,225	413	591	625	296	330	659		
Mahogany	I.G.P.	**Mahogany LS Total (df)**	720	-	311	360	156	205	409	Lift Station & FM By Developer	
Tessera	I.G.P.	**Tessera LS Total (df)**	2,030	-	876	1015	438	577	1154	Lift Station & FM By Developer	
LVE 1, 2, 3	I.G.P.	N/A	663	148	211	N/A					
All Basins Above	All Lift Stations Above	**Turner LS Total (ex)**	6,778	848	2,399	973	1200	(227)	(453)	Add 3rd 973 gpm Pump	
Sunset Harbor	I.G.P.	WWTP (ex)	288	-	83	N/A					
No Basin	Turner LS, Sunset Harbor	WWTP (ex)	7,066	848	2,482	N/A					
			125	50	71						
			1,823	-	784						
			7,066	848	2,482						
			9,014	**898**	**3,337**						
				LUEs 2024-2014=	2,439						

Legend:

(df)	Developer Funded
(ex)	Existing
(fu)	Future - Beyond Yr. 2024
I.G.P.	Individual Grinder Pumps

TABLE 5
1 OF 6
CAPITAL IMPROVEMENT PLAN
WASTEWATER FACILITIES
NORTH OF DAWN DRIVE
CITY OF LAGO VISTA

HAYNIE CONSULTING, INC

North WW Transmission - YEAR 2014, Wastewater System Model

Collection Basin	From Lift Station	To Lift Station	LUE Build-Out	LUE 2014	LUE 2024	2014 Existing WW Line Dia (in) (4" Min.)	C/S Area ft^2	Max Velocity 6.0 ft/sec	Max. Flow Rate cft/sec	Max. Resulting Flow Rate gpm	LUEs Served @0.5gpm/LUE	LUE Excess (Deficiency)	Comments and Recommendations	Include in Fee Period
LVCCE2, Overlook Villa	I.G.P.	WWTP (ex)	125	50	71	N/A								
Shoreline Ranch	I.G.P.	**Shoreline Ranch LS#1 Total (df)**	159	-	68	None							Lift Station & FM By Developer	
Shoreline Ranch	I.G.P.	Shoreline Ranch LS#2 (df)	23	-	9	N/A								
Shoreline Ranch	Shoreline Ranch LS#1 (df)	Shoreline Ranch LS#2 (df)	159	-	68	N/A								
Shoreline Ranch	-	**Shoreline Ranch LS#2 Total (df)**	182	-	77	None							Lift Station & FM By Developer	
Shoreline Ranch	I.G.P.	Shoreline Ranch LS#3 (df)	131	-	56	N/A								
Shoreline Ranch	I.G.P + SRLS#1 + SRLS#2	**Shoreline Ranch LS#3 Total (df)**	313	-	133	None							Lift Station & FM By Developer	
The Hollows	I.G.P.	Hollows LS (df)	244	-	105	N/A								
-	-	N/A	557	-	238	N/A								
-	I.G.P. (Jonestown)	Hollows LS (df)	716	-	309	N/A								
-	I.G.P. (Jonestown)	Hollows LS (df)	79	-	34	N/A								
-	-	N/A	795	-	343	N/A								
-	-	N/A	1,039	-	377	N/A								
Shoreline Ranch, Hollows	Hollows I.G.P. + SRLS#3	**Hollows LS Total (df)**	1,352	-	581	None							Lift Station & FM By Developer	
Travis Hollow, Lago Ranchos, Pearson	I.G.P.	WWTP (ex)	471	-	203	N/A								
-	-	N/A	1,823	-	784	N/A								
BKR 14	I.G.P.	Timber Trail LS (fu)	104	-	-	N/A							Future Beyond Year 2024	
BKR 15	I.G.P.	Airport LS (fu)	167	-	-	N/A							Future Beyond Year 2024	
-	Timber Trail LS	Airport LS (fu)	104	-	-	N/A							Future Beyond Year 2024	
BKR 11	I.G.P.	Bison Trail LS (fu)	180	-	-	N/A							Future Beyond Year 2024	
BKR 10	I.G.P.	Foothill Cove LS (fu)	79	-	-	N/A							Future Beyond Year 2024	
BKR 8	I.G.P.	Surrey Lane LS (fu)	55	-	-	N/A							Future Beyond Year 2024	
Most of BKR, LVE 5 & 7	I.G.P.	N/A	2,140	287	410	N/A								
BKR 4, 6, 5, 1, 2, 3, LVE 6, 4	I.G.P.	**Bar-K LS Total (ex)**	1,225	413	591	10	0.545	6.0	3.271	1468	2936	2523		
Mahogany	I.G.P.	**Mahogany LS Total (df)**	720	-	311	None							Lift Station & FM By Developer	
Tessera	I.G.P.	**Tessera LS Total (df)**	2,030	-	876	None							Lift Station & FM By Developer	
LVE 1, 2, 3	I.G.P.	N/A	663	148	211	N/A								
All Basins Above	All Lift Stations Above	**Turner LS Total (ex)**	6,778	848	2,399	10	0.545	6.0	3.271	1468	2936	2088		
Sunset Harbor	I.G.P.	WWTP (ex)	288	-	83	N/A								
No Basin	Turner LS, Sunset Harbor	WWTP (ex)	7,066	848	2,482	N/A								
		-	125	50	71									
		-	1,823	-	784									
		-	7,066	848	2,482									
			9,014	**898**	**3,337**									
				LUEs 2024-2014=	2,439									

North WW Transmission - YEAR 2024, Wastewater System Model

Collection Basin	From Lift Station	To Lift Station	LUE Build-Out	LUE 2014	LUE 2024	2024 Existing WW Line Dia (in) (4" Min.)	C/S Area ft^2	Max Velocity 6.0 ft/sec	Max. Flow Rate cft/sec	Max. Resulting Flow Rate gpm	LUEs Served @0.5gpm/LUE	LUE Excess (Deficiency)	Comments and Recommendations	Include in Fee Period
LVCCE2, Overlook Villa	I.G.P.	WWTP (ex)	125	50	71									
Shoreline Ranch	I.G.P.	**Shoreline Ranch LS#1 Total (df)**	159	-	68	4	0.087	6.0	0.523	235	470	402	Lift Station & FM By Developer	
Shoreline Ranch	I.G.P.	Shoreline Ranch LS#2 (df)	23	-	9									
Shoreline Ranch	Shoreline Ranch LS#1 (df)	Shoreline Ranch LS#2 (df)	159	-	68									
Shoreline Ranch		**Shoreline Ranch LS#2 Total (df)**	182	-	77	4	0.087	6.0	0.523	235	470	393	Lift Station & FM By Developer	
Shoreline Ranch	I.G.P.	Shoreline Ranch LS#3 (df)	131	-	56									
	I.G.P + SRLS#1 + SRLS#2	**Shoreline Ranch LS#3 Total (df)**	313	-	133									
The Hollows	I.G.P.	Hollows LS (df)	244	-	105									
		N/A	557	-	238									
	I.G.P. (Jonestown)	Hollows LS (df)	716	-	309									
	I.G.P. (Jonestown)	Hollows LS (df)	79	-	34									
		N/A	795	-	343									
		N/A	1,039	-	377									
Shoreline Ranch, Hollows	Hollows I.G.P. + SRLS#3	**Hollows LS Total (df)**	1,352	-	581	6	0.196	6.0	1.178	528	1057	476	Lift Station & FM By Developer	
Travis Hollow, Lago Ranchos, Pearson	I.G.P.	WWTP (ex)	471	-	203									
		N/A	1,823	-	784									
BKR 14	I.G.P.	Timber Trail LS (fu)	104	-	-								Future Beyond Year 2024	
BKR 15	I.G.P.	Airport LS (fu)	167	-	-								Future Beyond Year 2024	
	Timber Trail LS	Airport LS (fu)	104	-	-								Future Beyond Year 2024	
BKR 11	I.G.P.	Bison Trail LS (fu)	180	-	-								Future Beyond Year 2024	
BKR 10	I.G.P.	Foothill Cove LS (fu)	79	-	-								Future Beyond Year 2024	
BKR 8	I.G.P.	Surrey Lane LS (fu)	55	-	-								Future Beyond Year 2024	
Most of BKR, LVE 5 & 7	I.G.P.	N/A	2,140	287	410									
BKR 4, 6, 5, 1, 2, 3, LVE 6, 4	I.G.P.	**Bar-K LS Total (ex)**	1,225	413	591	10	0.545	6.0	3.271	1468	2936	2345		
Mahogany	I.G.P.	**Mahogany LS Total (df)**	720	-	311	4	0.087	6.0	0.523	235	470	159	Lift Station & FM By Developer	
Tessera	I.G.P.	**Tessera LS Total (df)**	2,030	-	876	6	0.196	6.0	1.178	528	1057	181	Lift Station & FM By Developer	
LVE 1, 2, 3	I.G.P.	N/A	663	148	211									
All Basins Above	All Lift Stations Above	**Turner LS Total (ex)**	6,778	848	2,399	10	0.545	6.0	3.271	1468	2936	2088		
Sunset Harbor	I.G.P.	WWTP (ex)	288	-	83									
No Basin	Turner LS, Sunset Harbor	WWTP (ex)	7,066	848	2,482									
			125	50	71									
			1,823	-	784									
			7,066	848	2,482									
			9,014	**898**	**3,337**									
				LUEs 2024-2014=	2,439									

Legend:

(df)	Developer Funded
(ex)	Existing
(fu)	Future - Beyond Yr. 2024
I.G.P.	Individual Grinder Pumps
C/S	Cross Sectional Area

TABLE 5
2 OF 6
CAPITAL IMPROVEMENT PLAN
WASTEWATER FACILITIES
NORTH OF DAWN DRIVE
CITY OF LAGO VISTA

HAYNIE CONSULTING, INC

South WW Pumping - Year 2014, Wastewater System Model

Collection Basin	From Lift Station	To Lift Station	LUE Build-Out	LUE 2014	LUE 2024	2014 Existing Pumps Firm Cap. (gpm)	2014 Min. Required Pumping @ 0.5gpm/LUE (gpm)	2014 Excess (gpm) (Deficiency)	2014 Excess (LUE) (Deficiency)	Comments and Recommendations	Include in Fee Period
Montechino-Lower Lots	I.G.P.	**Montechino L.S. #1 Total (df)**	270	-	116	None				Lift Station & FM By Developer	
Montechino-Middle Lots	I.G.P.	Montechino L.S. #2 (df)	538	-	232	N/A					
	Montechino L.S. #1	Montechino L.S. #2 (df)	270	-	116	N/A					
		Montechino L.S. #2 Total (df)	808	-	348	None				Lift Station & FM By Developer	
Montechino-Upper Lots	I.G.P.	Montechino L.S. #3 (df)	270	-	116	N/A					
	Montechino L.S. #1 & #2	Montechino L.S. #3 (df)	808	-	348	N/A					
		Montechino L.S. #3 Total (df)	1,078	-	464	None				Lift Station & FM By Developer	
The Falls	I.G.P.	**The Falls L.S. Total (ss)**	520	-	224	None				Lift Station & FM By Developer	
Tusikanni Cove	I.G.P.	**Tusikanni L.S. Total (ss)**	342	-	147	None				Lift Station & FM By Developer	
HLE 8, 9	I.G.P.	**Boone #2 L.S. Total (ex)**	366	56	80	300	28	272	544		
HLE 9	I.G.P.	Boone L.S. #1 (ex)	103	4	10	N/A					
	Boone L.S. #2	Boone L.S. #1 (ex)	366	56	80	N/A					
		Boone L.S. #1 Total (ex)	469	61	90	660	30	630	1259		
HLE 12, 17, 18, 13	I.G.P.	**Hancock L.S. Total (fu)**	256	73	105	None					
HLE 12	I.G.P.	Harrison L.S. (fu)	145	1	21	N/A					
	Hancock L.S.	Harrison L.S. (fu)	256	73	105	N/A					
		Harrison L.S. Total (fu)	401	74	126	None					
HLE and LVCCE Composite	I.G.P.	Flow into Junction Point @ Fairway #2	1,405	313	447	N/A					
	All L.S. Above: Montechino #3, Falls, Tusikanni, Boone 1, Harrison	Flow into Junction Point @ Fairway #2	2,810	135	1,051	N/A					
		Flow into Junction Point @ Fairway #2 Total	4,215	448	1,498	N/A					
HLE 18, The Coves	I.G.P.	**Coves L.S. Total (ex)**	155	44	62	87.5	22	66	131		
HLE 26, 30, and The Peninsula	I.G.P.	**The Inn L.S. Total (ex)**	621	155	221	260	77	183			
HLE 15, 30, 32	I.G.P.	Mac-Arthur L.S. (ex)	222	44	62	N/A					
	Coves L.S.	Mac-Arthur L.S. (ex)	155	44	62	N/A					
	The Inn L.S.	Mac-Arthur L.S. (ex)	621	155	221	N/A					
		Mac-Arthur L.S. Total (ex)	998	243	345	299	121	178	355		
HLE 26, 30	I.G.P.	Santa Carlo L.S.(ex)	402	47	67	N/A					
	MacArthur L.S.	Santa Carlo L.S.(ex)	998	243	345	N/A					
		Santa Carlo L.S. Total (ex)	1,400	290	412	301	145	156	312		
HLE 20, 21, 25, 31, 32	I.G.P.	Flow into Junction Point @ American/Parliament (I)	768	133	189	N/A					
	Santa Carlo L.S.	Flow into Junction Point @ American/Parliament (I)	1,400	290	412	N/A					
		Flow into Junction Point @ American/Parliament (I) Total	2,168	423	601	N/A					
HLE 34, Emerald Bend, Emerald Point	I.G.P.	**Omaha L.S. Total (ex)**	778	49	70	160	25	135	271		
HLE 24, 29, 33	I.G.P.	Truman L.S. (ex)	226	25	35	N/A					
	Omaha L.S.	Truman L.S. (ex)	778	49	70	N/A					
		Truman L.S. Total (ex)	1,004	74	105	123	37	86	172		
HLE 22, 23, 24, 25, 28, 29, 33, 34	I.G.P.	Flow into Junction Point @ American/Parliament (II)	659	361	517	N/A					
	Truman L.S.	Flow into Junction Point @ American/Parliament (II)	1,004	74	105	N/A					
		Flow into Junction Point @ American/Parliament (II)Total	1,663	435	622	N/A					
HLE 23, CCE 8	I.G.P.	High Drive L.S. (ex)	329	110	157	N/A					
	From Junction Point @ American/Parliament (I)	High Drive L.S. (ex)	2,168	423	601	N/A					
	From Junction Point @ American/Parliament (II)	High Drive L.S. (ex)	1,663	435	622	N/A					
		High Drive L.S. Total (ex)	4,160	968	1,380	580	484	96	192		
	High Drive L.S.	Flow into Manhole/Junction Point @ Fairway #2 (A&B)	4,160	968	1,380	N/A					
	Flow into Junction Point from Southeast @ Fairway #2 (A & B)	WWTP (ex)	4,215	448	1,498	N/A					
	Flow into Junction Point from SouthWest @ Fairway #2 (A & B)	WWTP (ex)	4,160	968	1,380	N/A					
		WWTP Total (ex)	8,375	1,416	2,878	N/A					
CCE 5, 7, 10	I.G.P.	**Driving Range L.S. Total (ex)**	333	172	246	500	86	414	828		
LVE 2, CCA, TP, LVCCE 1, 2, 3, 4, 6	I.G.P.	**Fairway #17 L.S. (ex)**	1,873	577	826	320	288	32			
Canyons Oaks II	Driving Range L.S., Fairway 17 L.S., Canyon Oaks IGP, Fairway 2 Junction	WWTP (ex)	333	172	246						
			1,873	577	826						
			20	13	18						
			8,375	1,416	2,878						
			10,601	2,178	3,968						
			LUEs 2024-2014=		1,790						

Legend:

(df)	Developer Funded
(ex)	Existing
(fu)	Future
I.G.P.	Individual Grinder Pumps

TABLE 5
3 OF 6
CAPITAL IMPROVEMENT PLAN
WASTEWATER FACILITIES
SOUTH OF DAWN DRIVE
CITY OF LAGO VISTA

HAYNIE CONSULTING, INC

South WW Pumping - Year 2024, Wastewater System Model

Collection Basin	From Lift Station	To Lift Station	LUE Build-Out	LUE 2014	LUE 2024	2024 Proposed Pumps Firm Cap. (gpm)	2024 Min. Required Pumping @ 0.5gpm/LUE	2024 Excess (gpm) (Deficiency)	2024 Excess (LUE) (Deficiency)	Comments and Recommendations	Include in Fee Period
Montechino-Lower Lots	I.G.P.	**Montechino L.S. #1 Total (df)**	270	-	116	135	58	77	154	Lift Station & FM By Developer	
Montechino-Middle Lots	I.G.P.	Montechino L.S. #2 (df)	538	-	232						
-	Montechino L.S. #1	Montechino L.S. #2 (df)	270	-	116						
-	-	**Montechino L.S. #2 Total (df)**	808	-	348	404	174	230	460	Lift Station & FM By Developer	
Montechino-Upper Lots	I.G.P.	Montechino L.S. #3 (df)	270	-	116						
-	Montechino L.S. #1 & #2	Montechino L.S. #3 (df)	808	-	348						
-	-	**Montechino L.S. #3 Total (df)**	1,078	-	464	539	232	307	614	Lift Station & FM By Developer	
The Falls	I.G.P.	**The Falls L.S. Total (ss)**	520	-	224	260	112	148	296	Lift Station & FM By Developer	
Tusikanni Cove	I.G.P.	**Tusikanni L.S. Total (ss)**	342	-	147	171	74	98	195	Lift Station & FM By Developer	
HLE 8, 9	I.G.P.	**Boone #2 L.S. Total (ex)**	366	56	80	300	40	260	520		
HLE 9	I.G.P.	Boone L.S. #1 (ex)	103	4	10						
-	Boone L.S. #2	Boone L.S. #1 (ex)	366	56	80						
-	-	**Boone L.S. #1 Total (ex)**	469	61	90	660	45	615	1230		
HLE 12, 17, 18, 13	I.G.P.	**Hancock L.S. Total (fu)**	256	73	105	128	53	76			
HLE 12	I.G.P.	Harrison L.S. (fu)	145	1	21						
-	Hancock L.S.	Harrison L.S. (fu)	256	73	105						
-	-	**Harrison L.S. Total (fu)**	401	74	126	201	63	138	275		
HLE and LVCCE Composite	I.G.P.	Flow into Junction Point @ Fairway #2	1,405	313	447						
-	All L.S. Above: Montechino #3, Falls, Tusikanni, Boone 1, Harrison	Flow into Junction Point @ Fairway #2	2,810	135	1,051						
-	-	**Flow into Junction Point @ Fairway #2 Total**	4,215	448	1,498						
HLE 18, The Coves	I.G.P.	**Coves L.S. Total (ex)**	155	44	62	87.5	31	57	113		
HLE 26, 30, and The Peninsula	I.G.P.	**The Inn L.S. Total (ex)**	621	155	221	260	111	150	299		
HLE 15, 30, 32	I.G.P.	Mac-Arthur L.S. (ex)	222	44	62						
-	Coves L.S.	Mac-Arthur L.S. (ex)	155	44	62						
-	The Inn L.S.	Mac-Arthur L.S. (ex)	621	155	221						
-	-	**Mac-Arthur L.S. Total (ex)**	998	243	345	299	173	127	253		
HLE 26, 30	I.G.P.	Santa Carlo L.S.(ex)	402	47	67						
-	MacArthur L.S.	Santa Carlo L.S.(ex)	998	243	345						
-	-	**Santa Carlo L.S. Total (ex)**	1,400	290	412	301	206	95	190		
HLE 20, 21, 25, 31, 32	I.G.P.	Flow into Junction Point @ American/Parliament (I)	768	133	189						
-	Santa Carlo L.S.	Flow into Junction Point @ American/Parliament (I)	1,400	290	412						
-	-	**Flow into Junction Point @ American/Parliament (I) Total**	2,168	423	601						
HLE 34, Emerald Bend, Emerald Point	I.G.P.	**Omaha L.S. Total (ex)**	778	49	70	160	35	125	250		
HLE 24, 29, 33	I.G.P.	Truman L.S. (ex)	226	25	35						
-	Omaha L.S.	Truman L.S. (ex)	778	49	70						
-	-	**Truman L.S. Total (ex)**	1,004	74	105	123	53	71	141		
HLE 22, 23, 24, 25, 28, 29, 33, 34	I.G.P.	Flow into Junction Point @ American/Parliament (II)	659	361	517						
-	Truman L.S.	Flow into Junction Point @ American/Parliament (II)	1,004	74	105						
-	-	**Flow into Junction Point @ American/Parliament (II)Total**	1,663	435	622						
HLE 23, CCE 8	I.G.P.	High Drive L.S. (ex)	329	110	157						
-	From Junction Point @ American/Parliament (I)	High Drive L.S. (ex)	2,168	423	601						
-	From Junction Point @ American/Parliament (II)	High Drive L.S. (ex)	1,663	435	622						
-	-	**High Drive L.S. Total (ex)**	4,160	968	1,380	580	690	(110)	(220)	Increase Pump Size Required	yes
-	High Drive L.S.	Flow into Manhole/Junction Point @ Fairway #2 (A&B)	4,160	968	1,380						
-	Flow into Junction Point from Southeast @ Fairway #2 (A & B)	WWTP (ex)	4,215	448	1,498						
-	Flow into Junction Point from SouthWest @ Fairway #2 (A & B)	WWTP (ex)	4,160	968	1,380						
-	-	**WWTP Total (ex)**	8,375	1,416	2,878						
CCE 5, 7, 10	I.G.P.	**Driving Range L.S. Total (ex)**	333	172	246	500	123	377	754		
LVE 2, CCA, TP, LVCCE 1, 2, 3, 4, 6	I.G.P.	**Fairway #17 L.S. (ex)**	1,873	577	826	320	413	(93)	(186)	Increase Pump Size Required	yes
Canyons Oaks II	Driving Range L.S., Fairway 17 L.S., Canyon Oaks IGP, Fairway 2 Junction	WWTP (ex)	333	172	246						
			1,873	577	826						
			20	13	18						
			8,375	1,416	2,878						
			10,601	2,178	3,968						
				LUEs 2024-2014=	1,790						

Legend:

(ss)	Site Specific
(ex)	Existing
(fu)	Future
I.G.P.	Individual Grinder Pumps

TABLE 5
4 OF 6
CAPITAL IMPROVEMENT PLAN
WASTEWATER FACILITIES
SOUTH OF DAWN DRIVE
CITY OF LAGO VISTA

HAYNIE CONSULTING, INC

South WW Transmission - YEAR 2014, Wastewater System Model

Collection Basin	From Lift Station	To Lift Station	LUE Build-Out	LUE 2014	LUE 2024	2014 Existing WW Line Dia (in) (4" Min.)	2014 C/S Area ft^2	2014 Max Velocity 6.0 ft/sec	2014 Max. Flow Rate cft/sec	2014 Max. Resulting Flow Rate gpm	2014 LUEs Served @0.5gpm/LUE	2014 LUE Excess (Deficiency)	Comments and Recommendations	Include in Fee Period
Montechino-Lower Lots	I.G.P.	**Montechino L.S. #1 Total (df)**	270	-	116	None								
Montechino-Middle Lots	I.G.P.	Montechino L.S. #2 (df)	538	-	232	N/A								
0	Montechino L.S. #1	Montechino L.S. #2 (df)	270	-	116	N/A								
0	0	**Montechino L.S. #2 Total (df)**	808	-	348	None								
Montechino-Upper Lots	I.G.P.	Montechino L.S. #3 (df)	270	-	116	N/A								
0	Montechino L.S. #1 & #2	Montechino L.S. #3 (df)	808	-	348	N/A								
0	0	**Montechino L.S. #3 Total (df)**	1,078	-	464	None								
The Falls	I.G.P.	**The Falls L.S. Total (ss)**	520	-	224	None								
Tusikanni Cove	I.G.P.	**Tusikanni L.S. Total (ss)**	342	-	147	None								
HLE 8, 9	I.G.P.	**Boone #2 L.S. Total (ex)**	366	56	80	6	0.196	6.0	1.178	528	1057	1000		
HLE 9	I.G.P.	Boone L.S. #1 (ex)	103	4	10	N/A								
0	Boone L.S. #2	Boone L.S. #1 (ex)	366	56	80	N/A								
0	0	**Boone L.S. #1 Total (ex)**	469	61	90	6	0.196	6.0	1.178	528	1057	996		
HLE 12, 17, 18, 13	I.G.P.	**Hancock L.S. Total (fu)**	256	73	105	None								
HLE 12	I.G.P.	Harrison L.S. (fu)	145	1	21	N/A								
0	Hancock L.S.	Harrison L.S. (fu)	256	73	105	N/A								
0	0	**Harrison L.S. Total (fu)**	401	74	126	None								
HLE and LVCCE Composite	I.G.P.	Flow into Junction Point @ Fairway #2	1,405	313	447	None								
0	All L.S. Above: Montechino #3, Falls, Tusikanni, Boone 1, Harrison	Flow into Junction Point @ Fairway #2	2,810	135	1,051	None								
0	0	**Flow into Junction Point @ Fairway #2 Total**	4,215	448	1,498	None								
HLE 18, The Coves	I.G.P.	**Coves L.S. Total (ex)**	155	44	62	4	0.087	6.0	0.523	235	470	426		
HLE 26, 30, and The Peninsula	I.G.P.	**The Inn L.S. Total (ex)**	621	155	221	4	0.087	6.0	0.523	235	470	315		
HLE 15, 30, 32	I.G.P.	Mac-Arthur L.S. (ex)	222	44	62	N/A								
0	Coves L.S.	Mac-Arthur L.S. (ex)	155	44	62	N/A								
0	The Inn L.S.	Mac-Arthur L.S. (ex)	621	155	221	N/A								
0	0	**Mac-Arthur L.S. Total (ex)**	998	243	345	6	0.196	6.0	1.178	528	1057	814		
HLE 26, 30	I.G.P.	Santa Carlo L.S.(ex)	402	47	67	N/A								
0	MacArthur L.S.	Santa Carlo L.S.(ex)	998	243	345	N/A								
0	0	**Santa Carlo L.S. Total (ex)**	1,400	290	412	6	0.196	6.0	1.178	528	1057	767		
HLE 20, 21, 25, 31, 32	I.G.P.	Flow into Junction Point @ American/Parliament (I)	768	133	189	None								
0	Santa Carlo L.S.	Flow into Junction Point @ American/Parliament (I)	1,400	290	412	None								
0	0	**Flow into Junction Point @ American/Parliament (I) Total**	2,168	423	601	None								
HLE 34, Emerald Bend, Emerald Point	I.G.P.	**Omaha L.S. Total (ex)**	778	49	70	4	0.087	6.0	0.523	235	470	420		
HLE 24, 29, 33	I.G.P.	Truman L.S. (ex)	226	25	35	N/A								
0	Omaha L.S.	Truman L.S. (ex)	778	49	70	N/A								
0	0	**Truman L.S. Total (ex)**	1,004	74	105	6	0.196	6.0	1.178	528	1057	983		
HLE 22, 23, 24, 25, 28, 29, 33, 34	I.G.P.	Flow into Junction Point @ American/Parliament (II)	659	361	517	None								
0	Truman L.S.	Flow into Junction Point @ American/Parliament (II)	1,004	74	105	None								
0	0	**Flow into Junction Point @ American/Parliament (II)Total**	1,663	435	622	None								
HLE 23, CCE 8	I.G.P.	High Drive L.S. (ex)	329	110	157	N/A								
0	From Junction Point @ American/Parliament (I)	High Drive L.S. (ex)	2,168	423	601	N/A								
0	From Junction Point @ American/Parliament (II)	High Drive L.S. (ex)	1,663	435	622	N/A								
0	0	**High Drive L.S. Total (ex)**	4,160	968	1,380	8	0.349	6.0	2.093	939	1879	910		
0	High Drive L.S.	Flow into Manhole/Junction Point @ Fairway #2 (A&B)	4,160	968	1,380	N/A								
0	Flow into Junction Point from Southeast @ Fairway #2 (A & B)	WWTP (ex)	4,215	448	1,498	N/A								
0	Flow into Junction Point from SouthWest @ Fairway #2 (A & B)	WWTP (ex)	4,160	968	1,380	N/A								
0	0	**WWTP Total (ex)**	8,375	1,416	2,878	N/A								
CCE 5, 7, 10	I.G.P.	**Driving Range L.S. Total (ex)**	333	172	246	8	0.349	6.0	2.093	939	1879	1707		
LVE 2, CCA, TP, LVCCE 1, 2, 3, 4, 6	I.G.P.	**Fairway #17 L.S. (ex)**	1,873	577	826	8	0.349	6.0	2.093	939	1879	1302		
Canyons Oaks II	Driving Range L.S., Fairway 17 L.S., Canyon Oaks IGP, Fairway 2 Junction	WWTP (ex)	333	172	246									
			1,873	577	826									
			20	13	18									
			8,375	1,416	2,878									
			10,601	2,178	3,968									
			LUEs 2024-2014=		1,790									

Legend:

(df)	Developer Funded
(ex)	Existing
(fu)	Future
I.G.P.	Individual Grinder Pumps

TABLE 5
5 OF 6
CAPITAL IMPROVEMENT PLAN
WASTEWATER FACILITIES
SOUTH OF DAWN DRIVE
CITY OF LAGO VISTA

HAYNIE CONSULTING, INC

South WW Transmission - YEAR 2024, Wastewater System Model

Collection Basin	From Lift Station	To Lift Station	LUE Build-Out	LUE 2014	LUE 2024	2024 Proposed WW Line Dia (in) (4" Min.)	C/S Area ft^2	Max Velocity 6.0 ft/sec	Max. Flow Rate cft/sec	Max. Resulting Flow Rate gpm	LUEs Served @0.5gpm/LUE	LUE Excess (Deficiency)	Comments and Recommendations	Include in Fee Period
Montechino-Lower Lots	I.G.P.	**Montechino L.S. #1 Total (df)**	270	-	116	4	0.087	6.0	0.523	235	470	354	Lift Station & FM By Developer	
Montechino-Middle Lots	I.G.P.	Montechino L.S. #2 (df)	538	-	232	N/A								
0	Montechino L.S. #1	Montechino L.S. #2 (df)	270	-	116	N/A								
0	0	**Montechino L.S. #2 Total (df)**	808	-	348	4	0.087	6.0	0.523	235	470	122	Lift Station & FM By Developer	
Montechino-Upper Lots	I.G.P.	Montechino L.S. #3 (df)	270	-	116	N/A								
0	Montechino L.S. #1 & #2	Montechino L.S. #3 (df)	808	-	348	N/A								
0	0	**Montechino L.S. #3 Total (df)**	1,078	-	464	4	0.087	6.0	0.523	235	470	6	Lift Station & FM By Developer	
The Falls	I.G.P.	**The Falls L.S. Total (ss)**	520	-	224	4	0.087	6.0	0.523	235	470	246	Lift Station & FM By Developer	
Tusikanni Cove	I.G.P.	**Tusikanni L.S. Total (ss)**	342	-	147	4	0.087	6.0	0.523	235	470	323	Lift Station & FM By Developer	
HLE 8, 9	I.G.P.	**Boone #2 L.S. Total (ex)**	366	56	80	6	0.196	6.0	1.178	528	1057	977		
HLE 9	I.G.P.	Boone L.S. #1 (ex)	103	4	10	N/A								
0	Boone L.S. #2	Boone L.S. #1 (ex)	366	56	80	N/A								
0	0	**Boone L.S. #1 Total (ex)**	469	61	90	6	0.196	6.0	1.178	528	1057	967		
HLE 12, 17, 18, 13	I.G.P.	**Hancock L.S. Total (fu)**	256	73	105	4	0.087	7.0	0.611	274	548	443		
HLE 12	I.G.P.	Harrison L.S. (fu)	145	1	21	N/A								
0	Hancock L.S.	Harrison L.S. (fu)	256	73	105	N/A								
0	0	**Harrison L.S. Total (fu)**	401	74	126	4	0.087	7.0	0.611	274	548	422		
HLE and LVCCE Composite	I.G.P.	Flow into Junction Point @ Fairway #2	1,405	313	447	N/A								
0	All L.S. Above: Montechino #3, Falls, Tusikanni, Boone 1, Harrison	Flow into Junction Point @ Fairway #2	2,810	135	1,051	N/A								
0	0	**Flow into Junction Point @ Fairway #2 Total**	4,215	448	1,498	N/A								
HLE 18, The Coves	I.G.P.	**Coves L.S. Total (ex)**	155	44	62	4	0.087	6.0	0.523	235	470	408		
HLE 26, 30, and The Peninsula	I.G.P.	**The Inn L.S. Total (ex)**	621	155	221	4	0.087	6.0	0.523	235	470	249		
HLE 15, 30, 32	I.G.P.	Mac-Arthur L.S. (ex)	222	44	62	N/A								
0	Coves L.S.	Mac-Arthur L.S. (ex)	155	44	62	N/A								
0	The Inn L.S.	Mac-Arthur L.S. (ex)	621	155	221	N/A								
0	0	**Mac-Arthur L.S. Total (ex)**	998	243	345	6	0.196	6.0	1.178	528	1057	712		
HLE 26, 30	I.G.P.	Santa Carlo L.S.(ex)	402	47	67	N/A								
0	MacArthur L.S.	Santa Carlo L.S.(ex)	998	243	345	N/A								
0	0	**Santa Carlo L.S. Total (ex)**	1,400	290	412	6	0.196	6.0	1.178	528	1057	645		
HLE 20, 21, 25, 31, 32	I.G.P.	Flow into Junction Point @ American/Parliament (I)	768	133	189	N/A								
0	Santa Carlo L.S.	Flow into Junction Point @ American/Parliament (I)	1,400	290	412	N/A								
0	0	**Flow into Junction Point @ American/Parliament (I) Total**	2,168	423	601	N/A								
HLE 34, Emerald Bend, Emerald Point	I.G.P.	**Omaha L.S. Total (ex)**	778	49	70	4	0.087	6.0	0.523	235	470	400		
HLE 24, 29, 33	I.G.P.	Truman L.S. (ex)	226	25	35	N/A								
0	Omaha L.S.	Truman L.S. (ex)	778	49	70	N/A								
0	0	**Truman L.S. Total (ex)**	1,004	74	105	6	0.196	6.0	1.178	528	1057	952		
HLE 22, 23, 24, 25, 28, 29, 33, 34	I.G.P.	Flow into Junction Point @ American/Parliament (II)	659	361	517	N/A								
0	Truman L.S.	Flow into Junction Point @ American/Parliament (II)	1,004	74	105	N/A								
0	0	**Flow into Junction Point @ American/Parliament (II)Total**	1,663	435	622	N/A								
HLE 23, CCE 8	I.G.P.	High Drive L.S. (ex)	329	110	157	N/A								
0	From Junction Point @ American/Parliament (I)	High Drive L.S. (ex)	2,168	423	601	N/A								
0	From Junction Point @ American/Parliament (II)	High Drive L.S. (ex)	1,663	435	622	N/A								
0	0	**High Drive L.S. Total (ex)**	4,160	968	1,380	8	0.349	6.0	2.093	939	1879	499		
0	High Drive L.S.	Flow into Manhole/Junction Point @ Fairway #2 (A&B)	4,160	968	1,380	N/A								
0	Flow into Junction Point from Southeast @ Fairway #2 (A & B)	WWTP (ex)	4,215	448	1,498	N/A								
0	Flow into Junction Point from SouthWest @ Fairway #2 (A & B)	WWTP (ex)	4,160	968	1,380	N/A								
0	0	**WWTP Total (ex)**	8,375	1,416	2,878	N/A								
CCE 5, 7, 10	I.G.P.	**Driving Range L.S. Total (ex)**	333	172	246	8	0.349	6.0	2.093	939	1879	1633		
LVE 2, CCA, TP, LVCCE 1, 2, 3, 4, 6	I.G.P.	**Fairway #17 L.S. (ex)**	1,873	577	826	8	0.349	6.0	2.093	939	1879	1053		
Canyons Oaks II	Driving Range L.S., Fairway 17 L.S., Canyon Oaks IGP, Fairway 2 Junction	WWTP (ex)	333	172	246									
			1,873	577	826									
			20	13	18									
			8,375	1,416	2,878									
			10,601	2,178	3,968									
			LUEs 2024-2014=		1,790									

Legend:

(df)	Developer Funded
(ex)	Existing
(fu)	Future
I.G.P.	Individual Grinder Pumps

TABLE 5
6 OF 6
CAPITAL IMPROVEMENT PLAN
WASTEWATER FACILITIES
SOUTH OF DAWN DRIVE
CITY OF LAGO VISTA

HAYNIE CONSULTING, INC

TABLE 6
POPULATION ESTIMATES / PROJECTIONS DATA

Local population estimates between 2010 and 2013.
(source: City of Austin):

Cedar Park	25.1 %
Georgetown	15.8 %
Jonestown	8.6 %
Lago Vista	6.8 %
Lakeway	15.6 %
Pflugerville	14.5 %
Round Rock	9.9 %

Population projection estimates 2014 to 2024 for Travis and surrounding Counties
(source, Texas State Data Center):

Williamson:	5.0 %
Travis:	2.3 %
Hays:	6.1 %

As growth increases through the growth corridor in northwest Travis County and southwest Williamson County including Round Rock, Georgetown, Cedar Park and Leander, it is reasonable to assume Lago Vista, in the growth corridor, will also experience a significant rate of growth and thus the population projection of 4.67% per year from 2014 through 2024 was selected.

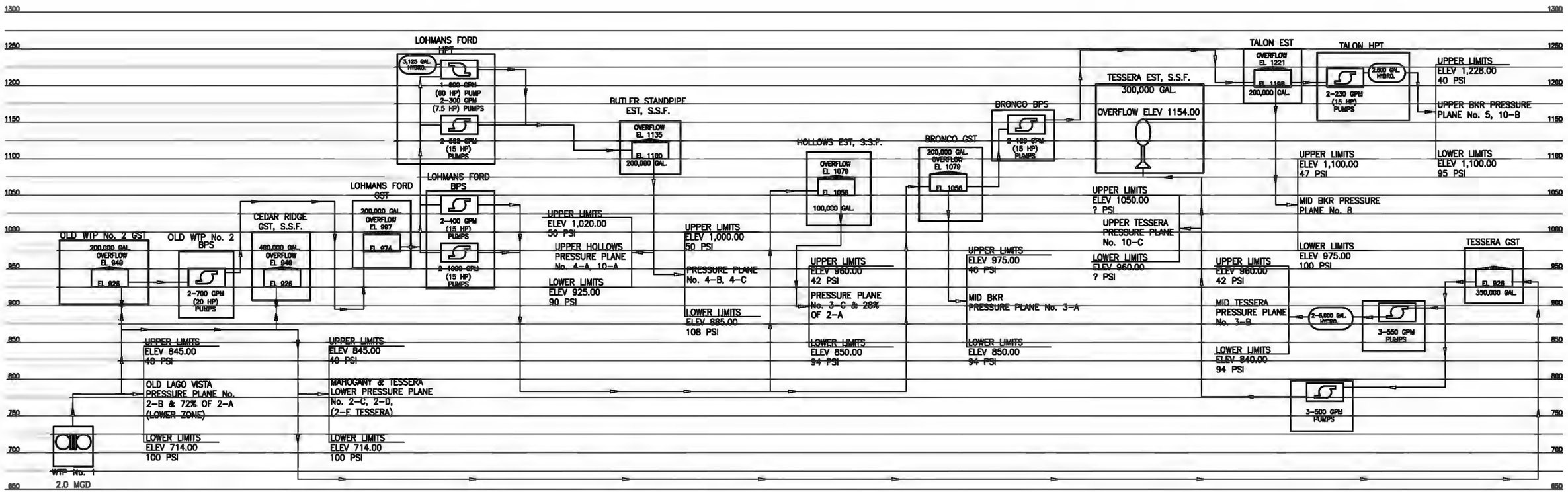

LEGEND

2,500 GAL. HYDRO.	EXISTING HYDROPNEUMATIC STORAGE TANK
	EXISTING PUMP STATION
	EXISTING GROUND STORAGE TANK (GST)
	EXISTING WATER TREATMENT PLANT (WTP)
	EXISTING PRESSURE REDUCING VALVE
S.S.F.	SITE SPECIFIC FACILITY
EST	ELEVATED STORAGE TANK
HPT	HYDRO-PNEUMATIC TANK
BPS	BOOSTER PUMP STATION
———	TEMPORARY SERVICE PLAN

PROJECT NO.	101-14-17	DESIGNED BY:	T.E.H.
FILE NAME:	Water Diagram	DRAWN BY:	KWM
DATE:	9/30/14	CHECKED BY:	T.E.H.
SCALE:	PLOT 1:1	REVISED BY:	KWM

HAYNIE CONSULTING, INC.
Civil Engineers and Land Surveyors
1010 Provident Lane
Round Rock, Texas 78664-3276
Ph. 512-837-2446 Fax 512-837-9463

FIGURE 1A
CITY OF LAGO VISTA
WATER FLOW DIAGRAM FOR LUES NORTH OF DAWN DRIVE PER YEAR 2024

HAYNIE CONSULTING, INC.

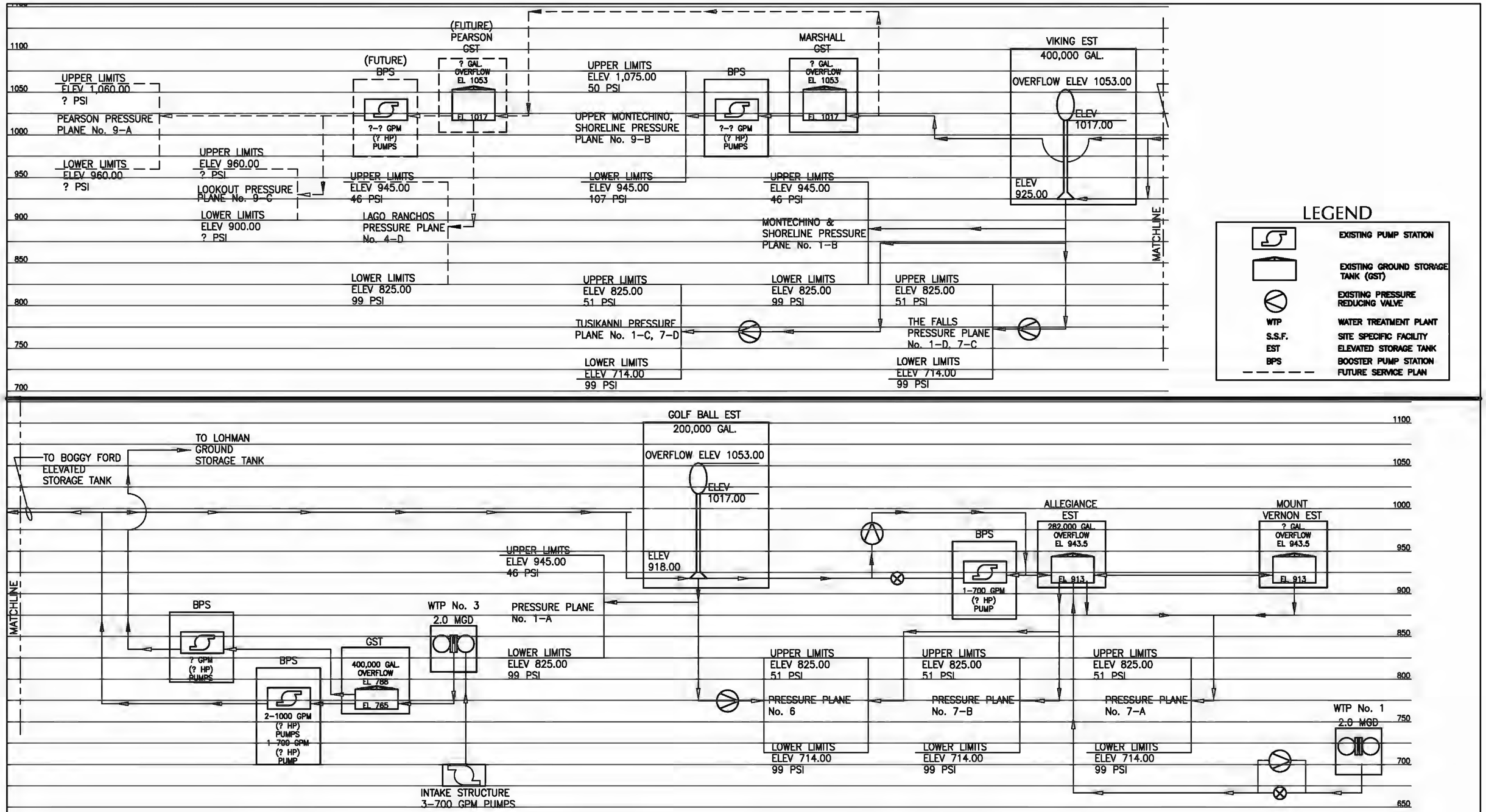

HAYNIE CONSULTING, INC.

Civil Engineers and Land Surveyors
1010 Provident Lane
Round Rock, Texas 78664-3276
Ph. 512-837-2446 Fax 512-837-9463

PROJ. 101-14-17	
FILE: Water Diagram	
DATE: 9/30/14	
SCALE: PLOT 1:1	
DESIGNED BY:	T.E.H.
DRAWN BY:	C.A.A.
CHECKED BY:	T.E.H.
REVISED BY:	K.W.M.

FIGURE 1B
CITY OF LAGO VISTA
WATER FLOW DIAGRAM FOR LUES SOUTH OF DAWN DRIVE PER YEAR 2024

HAYNIE CONSULTING, INC.

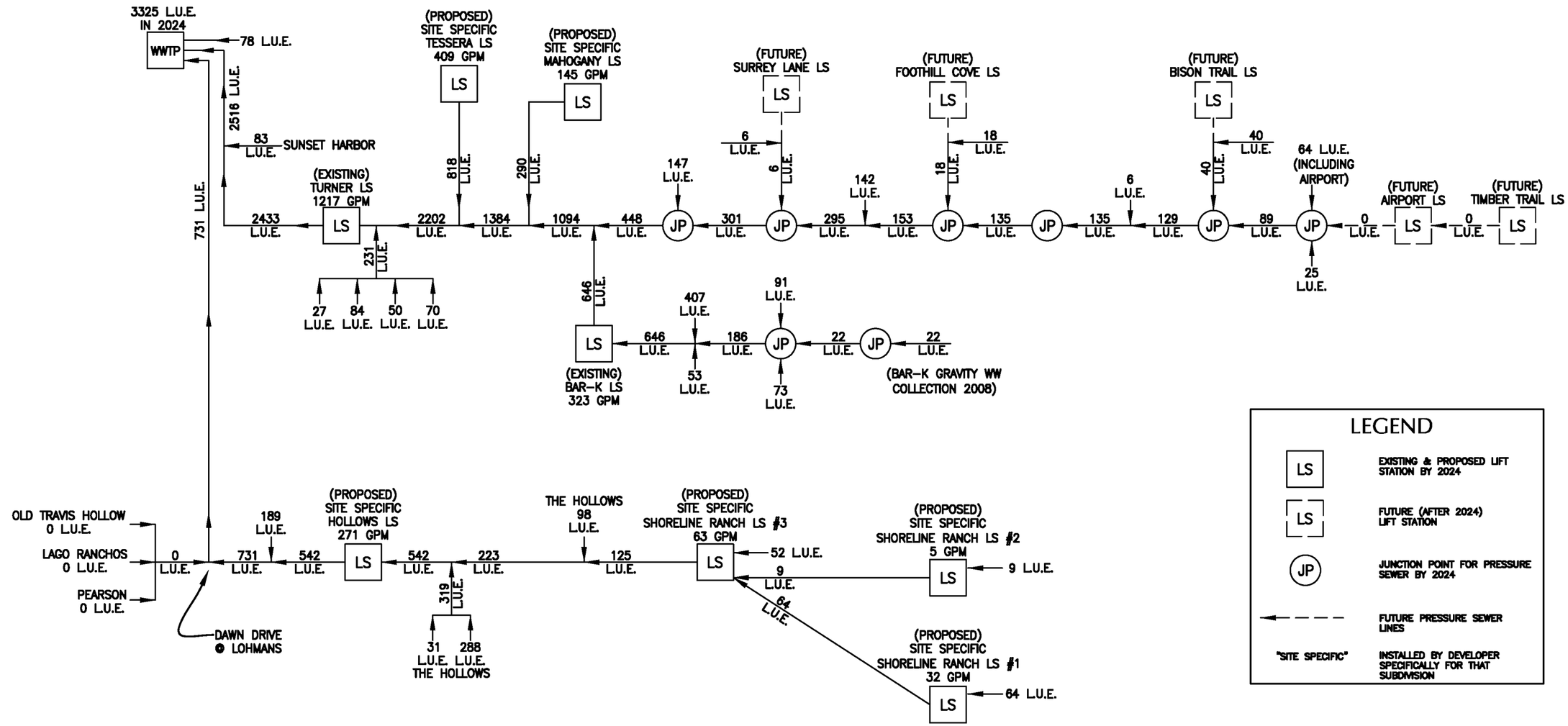

PROJECT NO. 101-14-17	DESIGNED BY: T.E.H.
FILE: COLV Wastewater Diagram	DRAWN BY: KWM
DATE: 9/30/14	CHECKED BY: T.E.H.
SCALE: PLOT 1:1	REVISED BY: KWM

HAYNIE CONSULTING, INC.
Civil Engineers and Land Surveyors
1010 Provident Lane
Round Rock, Texas 78664-3276
Ph. 512-837-2446 Fax 512-837-9463

FIGURE 2A
WASTEWATER LUE FLOW DIAGRAM NORTH OF DAWN DRIVE PER YEAR 2024
CITY OF LAGO VISTA

HAYNIE CONSULTING, INC.

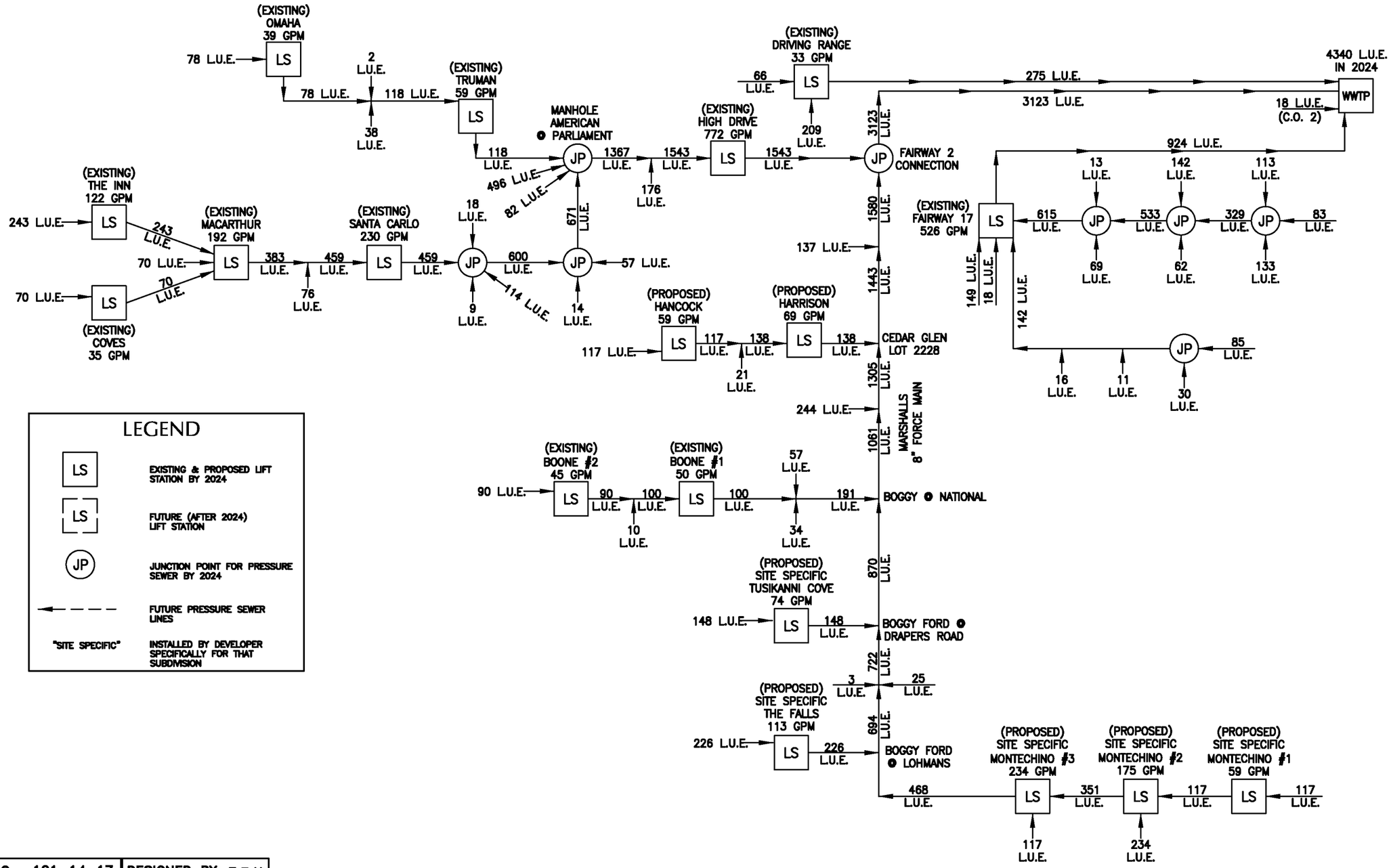

LEGEND

LS	EXISTING & PROPOSED LIFT STATION BY 2024
LS	FUTURE (AFTER 2024) LIFT STATION
JP	JUNCTION POINT FOR PRESSURE SEWER BY 2024
← — — —	FUTURE PRESSURE SEWER LINES
"SITE SPECIFIC"	INSTALLED BY DEVELOPER SPECIFICALLY FOR THAT SUBDIVISION

PROJECT NO. 101-14-17	DESIGNED BY: T.E.H.
FILE: COLV Wastewater Diagram	DRAWN BY: KWM
DATE: 9/30/14	CHECKED BY: T.E.H.
SCALE: PLOT 1:1	REVISED BY: KWM

HAYNIE CONSULTING, INC.
Civil Engineers and Land Surveyors
1010 Provident Lane
Round Rock, Texas 78664-3276
Ph. 512-837-2446 Fax 512-837-9463

FIGURE 2B
WASTEWATER LUE FLOW DIAGRAM NORTH OF DAWN DRIVE PER YEAR 2024
CITY OF LAGO VISTA

HAYNIE CONSULTING, INC.

CITY OF LAGO VISTA, TEXAS

ORDINANCE NO. 00-12-14-07

THE COMMUNITY IMPACT FEE ORDINANCE

AN ORDINANCE OF THE CITY OF LAGO VISTA, TEXAS, PROVIDING DEFINITIONS; ADOPTING A CAPITAL IMPROVEMENTS PLAN; ESTABLISHING A COMMUNITY IMPACT FEE BASED UPON LIVING UNIT EQUIVALENTS; PROVIDING CONSTRUCTION, SEVERABILITY AND OPEN MEETING CLAUSES; AND ESTABLISHING AN EFFECTIVE DATE.

Whereas, the City Council of the City of Lago Vista, Texas (the "City Council") adopted Resolution No. 00-959, on July 20, 2000 and Resolution No. 00-971, on September 21, 2000, establishing the dates for public hearings and directing than notice to be given for such public hearings to be held as provided for in Chapt. 395, Tex. Loc. Gov't. Code ("Chapter 395");

Whereas, after notice of public hearing for the Land Use Assumptions was published on August 10th, 17th and 24th of 2000, the City Council held such public hearing on September 14, 2000 to consider the land use assumptions;

Whereas, after notice of public hearing for the Capital Improvements Plan relating to possible adoption of impact fees was published on October 26th, November 2nd and 9th, of 2000, the City Council held a public hearing on November 30, 2000 to consider a proposed capital improvements plan;

Whereas, the City Council approved the proposed land use assumptions and the capital improvements plan by resolution; and

Whereas, in accordance with the above steps, the City Council desires to adopt a capital improvements plan and a Community Impact Fee pursuant to Chapter 395;

NOW, THEREFORE, BE IT ORDAINED BY THE CITY COUNCIL OF THE CITY OF LAGO VISTA, TEXAS, THAT:

PART 1. GENERAL PROVISIONS.

Section 1.1. Title. This ordinance shall be known, and may be cited, as the Community Impact Fee ordinance of the City of Lago Vista, Texas.

Section 1.2. Purpose. This Ordinance is intended to assure the provision of adequate public

facilities to serve new development in the City's service area by requiring said development to pay its pro rata share of the costs of improvements necessitated by and attributable to such new development.

Section 1.3. Authority. This Ordinance is adopted pursuant to Chapter 395, Texas Local Government Code, the Texas Constitution and the general laws of the State of Texas. The provisions of this Ordinance shall not be construed to limit the power of the City to utilize other methods authorized under State law or pursuant to other City powers to accomplish the purposes set forth herein, either in substitution or in conjunction with this Ordinance. Guidelines may be developed by resolution or otherwise to implement and administer this Ordinance.

Section 1.4. Definitions. In this Ordinance:

(1) "Advisory Committee" means the City's Impact Fee Advisory Committee appointed by the City Council pursuant to § 395.058, Tex. Loc. Gov't. Code, to advise and assist in the adoption of land use assumptions, review and file comments on the capital improvements plan and to perform the other duties set forth in such section.

(2) "Assessment" means the determination of the amount of the impact fee per service unit and is the maximum amount which can be imposed on new development pursuant to this Ordinance.

(3) "Capital Improvement" means either a water facility or a wastewater facility, with a life expectancy of three (3) or more years, to be owned and operated by or on behalf of the City and as listed in the Impact Fee Capital Improvements Plan.

(4) "Chapter 395" means Chapter 395, Texas Local Government Code, as amended.

(5) "City" means the City of Lago Vista, Texas.

(6) "Credit" means the amount of the reduction of an impact fee or fees, payments or charges for the approved construction or provision of the same type of capital improvements for which the fee has been assessed.

(7) "Facilities Expansion" means either a water facility expansion or a wastewater facility expansion.

(8) "Final Plat Approval" or "Approval of a Final Plat" means the point at which the applicant has complied with all conditions of approval and the plat has been released for filing with the County Clerk of Travis County.

(9) "Guidelines" means administrative or procedural guidelines, if any, developed by the City to further the implementation of the provisions of this Ordinance. Said guidelines, as amended from time to time, shall not supersede any provision or alter any substantive procedure established in this Ordinance.

(10) "Impact Fee" means a fee, charge or assessment for water facilities, a fee for wastewater facilities, or both, as appropriately imposed on new development by the City in order to fund or recoup the costs of capital improvements or facilities expansions necessitated by and attributable to such new development. Impact Fees do not include the dedication or rights-of-way or easements for such facilities, the construction of water or wastewater improvements and other infrastructure within the development to serve the development unless such water or wastewater improvement is listed on the impact fee capital improvements plan, the dedication of park land or open space, any site-specific facility, or any other work, dedication or improvement that is not a water or wastewater facility listed on the impact fee capital improvements plan.

(11) "Impact Fee Capital Improvements Plan" means a water improvements plan or a wastewater improvements plan adopted or revised pursuant to this Ordinance.

(12) "Land Use Assumptions" means the projections of population growth and associated changes in land uses and intensities adopted by the City, as may be amended from time to time, upon which the impact fee capital improvements plan is based.

(13) "Living Unit Equivalent (L.U.E.)" means a unit of measure which represents the quantity of water utilized and wastewater generated on an average annual daily basis from a single-family, detached residence of average size and occupancy and which is the standardized measure used for service units. The formula for determining Living Unit Equivalents is set out in the Impact Fee Capital Improvements Plan, attached hereto as Exhibit "A".

(14) "New Development" means the subdivision of land; the construction, reconstruction, redevelopment, conversion, structural alteration, relocation, or enlargement of any structure; or any use or extension of the use of land; any of which increases the number of service units.

(15) "Offsite" means located entirely on land which is not included within the bounds of the plat or project being considered for impact fee assessment.

(16) "Platted" means platted in accordance with Chapter 212, Tex. Loc. Gov't. Code, or the applicable subdivision or platting procedures of the City of Lago Vista.

(17) "Service Area" means the area within which impact fees for capital improvements or facilities expansions will be collected for new development occurring within such area and within which fees so collected will be expended for those types of improvements or expansions identified in the capital improvements plan applicable to the service area.

(18) "Service Unit" means the same as "living unit equivalent", which is the applicable standard units of measure shown in Exhibit "A" hereto.

(19) "Site-Specific Facility" means an improvement or facility which is for the primary use

or benefit of a new development and which is not included in the capital improvements plan and for which the developer or property owner is solely responsible under subdivision and other applicable regulations. Site-specific facility may include improvements located offsite, within, or on the perimeter of the new development site.

(20) "Wastewater Facility" means an improvement for providing sanitary sewer service, including, but not limited to, land or easements, treatment facilities, lift stations, collection lines, or interceptor mains. Wastewater facilities exclude site-specific facilities constructed by developers.

(21) "Wastewater Facility Expansion" means the expansion of the capacity of any existing wastewater facility for the purpose of serving new development, but does not include the repair, maintenance, modernization, or expansion of an existing wastewater facility to serve existing development.

(22) "Wastewater Improvements Plan" means the adopted plan, as may be amended from time to time, which identifies the wastewater facilities or sanitary sewer expansions and their associated costs which are necessitated by and which are attributable to new development projected within a period not to exceed ten (10) years, and which are to be financed in whole or in part through the imposition of community impact fees pursuant to this Ordinance.

(23) "Water Facility" means an improvement for providing water service, including, but not limited to, land or easements, water supply, water treatment facilities, water supply facilities, water storage facilities, or water distribution lines. Water facility excludes site-specific facilities constructed by developers.

(24) "Water Facility Expansion" means the expansion of the capacity of any existing water facility, including increasing contract rights for water supply, for the purpose of serving new development, but does not include the repair, maintenance, modernization, or expansion of an existing water facility to serve existing development.

(25) "Water Improvements Plan" means the adopted plan, as may be amended from time to time, which identifies the water facilities or water expansions and their associated costs which are necessitated by and which are attributable to new development projected within a period not to exceed ten (10) years, and which are to be financed in whole or in part through the imposition of community impact fees pursuant to this Ordinance.

(26) Terms used which are defined in § 395.001, Tex. Loc. Gov't. Code, shall have the same meaning as they have in said Code.

Section 1.5. Adoption of Capital Improvements Plan. The capital improvements plan identifying capital improvements or facility expansions pursuant to which impact fees may be assessed, as considered at the November 30, 2000 public hearing and is set out in Exhibit "A" attached hereto, is hereby adopted.

Section 1.6. State Law. Chapter 395 supplements this Ordinance to the extent that its provisions may be applicable hereto and, to such extent, its provisions are incorporated herein.

Section 1.7. Advisory Committee.

(a) The Advisory Committee shall consist of the City Planning and Zoning Commission (the "Commission") and other citizens of the City appointed by the City Council. If the Commission does not include at least one representative of the real estate, development or building industry who is not an employee or official of a governmental entity, the City council shall appoint at least one representative, having such qualifications, as a voting member of the Advisory Committee. If any impact fee is to be applied to the extraterritorial jurisdiction of the City, a representative from that area shall be appointed by the City Council.

(b) The duties of the Advisory Committee shall be as follows:

(i) advise and assist the adoption of land use assumptions;

(ii) review the capital improvements plan and file written comments;

(iii) monitor and evaluate implementation of the capital improvements plan;

(iv) file semi-annual reports with respect to the progress of the capital improvements plan and report to the City Council any perceived inequities in implementing the plan or imposing the impact fee; and

(v) recommend to the City Council as necessary and required the timely amendment and/or update of the capital improvements plan and the impact fees.

(c) All information and professional reports concerning the development and implementation of the capital improvements plan shall be made available to the Advisory Committee, and the City staff and contract officers of the City shall provide the committee with such support and assistance as may be required.

PART 2. COMMUNITY IMPACT FEE ESTABLISHED.

Section 2.1. Establishment. There is hereby established a Community Impact Fee which shall be imposed against new development in order to generate revenues for funding or recouping the costs of capital improvements or facility expansions necessitated by and attributable to such new development.

Section 2.2. Basis. The Community Impact Fee shall be assessed on the basis of Living Unit Equivalents. The number of Living Unit Equivalents shall be determined at the time of assessment

as hereinafter set out.

Section 2.3. Amount. The Community Impact Fee for each Living Unit Equivalent shall, as set forth in Exhibit "A" as amended from time to time in accordance with Chapter 395, be $1,000.00 for water service and $1,000.00 for wastewater service.

Section 2.4. Payment. All payments pursuant to this Ordinance shall be made to the City Secretary or his/her designate.

Section 2.5. Exemption or Waiver.

(a) Any building permit application which was duly accepted for filing prior to the effective date of this Ordinance and subsequently granted, shall be exempt from the assessment and payment of an impact fee under this Ordinance, unless such application thereafter expires. The applicant for any such building permit described in the preceding sentence shall be required to pay the impact fee specified by Ordinance 00-12-14-07.

(b) The City Council may grant a waiver from any requirement of this Ordinance on other grounds, as may be set forth in administrative guidelines.

(c) If the City Council grants a variance or waiver to the amount of the impact fee due for a new development under this Section, it shall cause to be appropriated from the other City funds the amount of the reduction in the impact fee to the capital improvements account.

Section 2.6. Establishment of Accounts.

(a) The City shall establish an account to which interest is allocated for each category of capital facility for which an impact fee is imposed pursuant to this Ordinance. Each impact fee collected within the service area shall be deposited in such account.

(b) Interest earned on the impact fee account shall be considered funds of the account and shall be used solely for the purposes authorized in Section 2.7.

(c) The City shall establish adequate financial and accounting controls to ensure that impact fees disbursed from the account are utilized solely for the purposes authorized in Section 2.7. Disbursement of funds shall be authorized by the City at such times as are reasonably necessary to carry out the purposes and intent of this Ordinance; provided, however, that any fee paid shall be expended within a reasonable period of time, but not to exceed ten (10) years from the date the fee is deposited into the account.

(d) The City shall maintain and keep financial records for impact fees, which shall show the source and disbursement of all fees collected or expended.

Section 2.7. Use of Proceeds.

(a) The impact fees collected pursuant to this Ordinance may be used to finance or to recoup the costs of any capital improvements or facilities expansions identified in the impact fee capital improvements plan for the service area, including the construction contract price, surveying and engineering fees, land acquisition costs (including land purchases, court awards and costs, attorney's fees, and expert witness fees), and the fees actually paid or contracted to be paid to an independent qualified engineer or other consultants preparing or updating the impact fee capital improvements plan who is not an employee of the City. Impact fees may also be used to pay the principal sum and interest and other finance costs on bonds, notes or other obligations issued by or on behalf of the City to finance such capital improvements or facilities expansions.

(b) Impact fees collected pursuant to this Ordinance shall not be used to pay for any of the following expenses:

(i) construction, acquisition or expansion of capital improvements or assets other than those identified in the capital improvements plan;

(ii) repair, operation, or maintenance of existing or new capital improvements or facilities expansions;

(iii) upgrading, expanding or replacing existing capital improvements to serve existing development in order to meet stricter safety, efficiency, environmental or regulatory standards;

(iv) upgrading, expanding or replacing existing capital improvements to provide better service to existing development; provided, however, that impact fees may be used to pay the costs of upgrading, expanding or replacing existing capital improvements in order to meet the need for new capital improvements generated by new development; or

(v) administrative and operating costs of the city.

PART 3. APPLICABILITY OF COMMUNITY IMPACT FEES.

Section 3.1. Fees.

(a) Unless there is executed an agreement for payment of impact fees in another manner, the Community Impact Fee imposed by this Ordinance shall apply to new development.

(b) The Community Impact Fee for development coming under this section shall be assessed and collected with respect to development which occurs or is proposed at the earlier of the time application is made for a building permit or application is made for connection to the City's water or wastewater system.

(c) Impact fees may be assessed but not collected for property where service is not available unless:

(i) the City commits to commence construction of necessary facilities identified in the capital improvements plan within two years and will have service available within a reasonable time not to exceed five years;

(ii) the City agrees in writing to permit the property owner to construct or finance the required capital improvement(s) or facility expansion(s) and that the costs incurred or funds advanced by such owner will either

(A) be credited against the impact fees otherwise due from such owner;

(B) reimburse the owner for such costs from impact fees paid from such owner and other new developments that will use such improvements or expansions, in which case fees shall be reimbursed to the owner as and when collected by the City from new development; or

(C) the owner voluntarily requests the City to reserve capacity to serve future development and the City and the owner enter into a valid written agreement;

provided that any such impact fee assessed but not collected, and for which no written agreement is entered into between the City and the property owner pursuant to this Section 3.1(c), shall be thereafter collected at the earlier of the time the City contracts for the capital improvements necessary to serve the property or service is made available to the property.

(d) A property owner and the City may enter into a valid written agreement providing for the time and method of the payment of impact fees, which agreement shall prevail over any contrary provision of this Ordinance.

Section 3.2. Calculation of Impact Fees.

(a) Impact fees shall be calculated based upon the number of service units as determined by using the conversion table provided in Exhibit "A". The impact fee required for any property, development or application shall be determined by multiplying the number of service units in the proposed development by the amount of the respective impact fees per service unit set forth in Section 2.3 and in Exhibit "A".

(b) Should the number of service units required for any property increase after the impact fees for such property are assessed and collected, the impact fees for such property shall be increased in an amount equal to the impact fee established by this Ordinance multiplied by the number of additional service units required for such property.

(c) The total amount of impact fees to be paid to and deposited into the impact fee account by the City for any development shall be reduced by any allowable credits, if any, for the category of capital improvements as provided in Section 3.6.

(d) If at anytime impact fees are assessed against any property but are unpaid, the total amount of such unpaid impact fees shall be attached to the development application, plat and/or other documents applicable to the property and thereafter collected

(i) at the earliest time provided for in this Ordinance; and

(ii) in no event later than the date service is connected to the property.

(e) Replatting shall not require recalculation of impact fees unless the number of service units is increased. If a proposed replat increases the number of service units, the impact fee shall be recalculated as provided in Section 3.2(b) above.

Section 3.3. In Addition to Other Fees. The Community Impact Fee shall be charged in addition to all other fees set out by City Ordinance or regulation including, but not limited to, building permit fees and tap fees, park land dedication requirements and payments in lieu, and dedication of easements and right-of-way.

Section 3.4. Easement Exclusive of Fees. If granting of easements or rights-of-way is necessary to construction of an impact fee capital improvement, said easement shall be granted by the record owner of the land so affected, exclusive and in addition to the payment of the impact fee, and at the time of payment of the impact fee, as a condition of service. if construction of an impact fee capital improvement is undertaken by the City in any public right-of-way due to lack of said easement, and subsequent relocation of the improvement is required by any public agency, the record owner of the land shall bear all expense of said relocation.

Section 3.5. Appeals.

(a) The property owner or applicant for new development may appeal the following decisions to the City Council: (1) the applicability of an impact fee to the development; (2) the amount of the impact fee due; (3) the availability or the amount of any credit; (4) the application of any credit against an impact fee due; (5) the amount of a refund due, if any.

(b) The burden of proof shall be on the appellant to demonstrate that the amount of the fee or the amount of the credit was not calculated according to the applicable schedule of service units or the guidelines established for determining credits.

(c) The appellant must file a notice of appeal with the City Secretary within thirty (30) days following the decision appealed from. If the notice of appeal is accompanied by a bond or other

sufficient surety satisfactory to the City Attorney in an amount equal to the original determination of the impact fee due, the development application may be processed while the appeal is pending.

Section 3.6. Credits. If the property owner and the City have entered into a valid written agreement authorized by the City Council, then, in that event, to the extent provided for in such agreement, if any, the property owner shall be entitled to:

(a) an off-set against or credit for the payment of impact fees otherwise payable by such property owner for the land being developed, to the extent of the approved costs and expense of any such construction, contribution, or dedication of any facility appearing on the capital improvements plan which is required to be constructed by the City in order to serve a property owner's development, that is paid or made by such property owner;

(b) A credit against any category of impact fee as provided in the agreement; or

(c) Reimbursement for the costs of capital improvement(s), constructed or paid by the property owner, from impact fees received from other new developments that will use such capital improvement(s) or facility expansion(s).

Section 3.7. Refunds.

(a) On the request of an owner of property on which an impact fee has been paid, the political subdivision shall refund the impact fee if existing facilities are available and service is denied or the political subdivision has, after collecting the fee when service was not available, failed to commence construction within two years or service is not available within a reasonable period considering the type of capital improvement or facility expansion to be constructed, but in no event later than five years from the date of the fee payment.

(b) Upon completion of all the capital improvements or facilities expansions identified in the impact fee capital improvements plan, the City shall recalculate the maximum impact fee per service unit using the actual costs of the capital improvements or expansions. If the maximum impact fee per service unit based on actual cost is less than the impact fee per service unit paid, the City shall refund the difference, if such difference exceeds the impact fee paid by more than ten percent (10%). The refund to the record owner shall be calculated by multiplying such difference by the number of service units for the development for which the fee was paid, and interest due shall be calculated upon that amount.

(c) The City shall refund any impact fee or part thereof that is not spent as authorized by this Ordinance within 10 years after the date of the fee payment.

(d) An impact fee collected pursuant to this Ordinance shall be considered expended if the total expenditures for capital improvements or facilities expansions authorized in Section 2.7 within the service area within ten (10) years following the date of collection exceeds the total fees collected for

such improvements or expansions during such period.

(e) If a refund is due pursuant to this section, the City shall pro-rate the same by dividing the difference between the amount of expenditures and the amount of the fees collected by the total number of service units assumed within the service area for the period to determine the refund due per service unit. The total refund payable to any such property owner shall be calculated by multiplying the refund due per service unit by the number of service units for the property for which the fee was paid, and interest due shall be calculated upon that amount.

(f) Refunds shall be made only to the record owner of the property at the time of the refund and shall bear interest calculated from the date of collection to the date of refund at the statutory rate as set forth in § 302.002 of the Texas Finance Code, or its successor.

Section 3.8. Updates to Plan and Revision of Fees.

(a) The City shall update its land use assumptions and impact fee capital improvements plan and shall recalculate its impact fees not less than once every three years in accordance with the procedures set forth in Texas Rev. Civil Statutes, Local Government Code, Section 395, or in any successor statute; provided that after giving the required notice the City Council may determine that no changes or amendments are required.

(b) The City may review its land use assumptions, impact fee capital improvements plan, and other factors such as market conditions more frequently than provided in subsection (a) to determine if the land use assumptions and capital improvements plan should be updated and the impact fee recalculated accordingly.

Section 3.9. Prohibition Against Transfer. The payment of impact fees and credits earned under this Ordinance shall inure to the benefit of and remain with the land for which such impact fees were paid or credits earned, and may not be sold, assigned, conveyed or transferred for the benefit of any other land or property. No impact fee receipts, LUEs, rights, benefits or credits arising under this Ordinance may be sold, assigned, transferred or conveyed except to a subsequent grantee or purchaser of the land for which such fee was paid or credit earned. All rights or benefits arising from the payment of an impact fee or any credit shall automatically vest in the owner and each subsequent owner of the land for which the fee was paid or credit earned.

PART 4: CLOSING PROVISIONS.

Section 4.1. Construction. The terms and provisions of this Ordinance shall not be construed in a manner to conflict with Chapter 395, as amended, and if any term or provision of this Ordinance shall appear to conflict with any term, provision or condition of Chapter 395, such Ordinance term or provision shall be read, interpreted and construed in a manner consistent with and not in conflict with Chapter 395.

Section 4.2. Severability. If any provision of this ordinance or the application of any provision to any person or circumstance is held invalid, the invalidity shall not affect other provisions or applications of the ordinance which can be given effect without the invalid provision or application, and to this end the provisions of this ordinance are declared to be severable.

Section 4.3. Code of Ordinances. It is the intention of the Council that this ordinance shall become a part of the Code of Ordinances of the City of Lago Vista, Texas, and may be renumbered and codified therein accordingly.

Section 4.4. Effective Date. This ordinance shall take effect immediately from and after its passage and publication in accordance with the provisions of the Tex. Loc. Gov't. Code, and it is accordingly so ordained.

Section 4.5. Open Meetings. It is hereby officially found and determined that the meeting at which this ordinance is passed was open to the public as required and that public notice of the time, place, and purpose of said meeting was given as required by the Open Meetings Act.

PASSED AND APPROVED on this 14th day of December, 2000.

Attest:

Joyce Ann Stapleton

Joyce Stapleton, City Secretary

THE CITY OF LAGO VISTA, TEXAS

Dennis Jones

Dennis Jones, Mayor

Exhibit “B”

Impact Fee Advisory Committee Written Comments

Attachment 2

Neighboring Jurisdiction Impact Fees

2016 IMPACT FEE TAP FEES FOR LOCAL CITIES

City	Last Updated	Water Impact Fee	Wastewater Impact Fee	Water Tap Fee	Wastewater Tap Fee	Total Impact Fee	Total Tap Fee	Total Fees	Notes
Lago Vista	February 2015	$3,000.00	$2,115.00	$1,500.00	$1,500.00	$5,115.00	$3,000.00	$8,115.00	Tap fees were last risen in 2008
Cedar Park	July 2014	$2,250.00	$2,000.00	$425.00	$800.00	$4,250.00	$1,225.00	$5,475.00	
Leander	May 2012	$3,880.00	$1,615.00	$840.00	$750.00	$5,495.00	$1,590.00	$7,085.00	Additional fees: if street cuts are required or City installs meter.
Marble Falls	September 2013	$853.82	$256.46	$800.00	$800.00	$1,110.28	$1,600.00	$2,710.28	
Lakeway	NA	$0.00	$0.00	$1,200.00	$1,200.00	$0.00	$2,400.00	$2,400.00	No Impact Fee
Round Rock	August 2012								
Plats Recorded Prior 1-Jan-2005		$2,910.00	$1,059.00	$167.00	$200.00	$3,969.00	$367.00	$4,336.00	
Plats Recorded 1-Jan-2005 to 31-Dec-2008		$4,296.00	$1,306.00	$167.00	$200.00	$5,602.00	$367.00	$5,969.00	
Plats Recorded 1-Jan-2009 to 31-Jul-2012		$4,446.00	$2,383.00	$167.00	$200.00	$6,829.00	$367.00	$7,196.00	
Plats Recorded After 1-Aug-2012		$3,889.00	$2,073.00	$167.00	$200.00	$5,962.00	$367.00	$6,329.00	
Jonestown	NA	$0.00	$0.00	Varies	$0.00	$0.00	Varies	Varies	Varies -$2,555 to $3,005 depending on the area
Georgetown	Effective October 2017								
City		$7,039.00	$2,997.00	$350.00	$300.00	$10,036.00	$650.00	$10,686.00	
Southfork Watewater		$7,039.00	$4,452.00	$500.00	$450.00	$11,491.00	$950.00	$10,986.00	Impact Fees - Going up from 2015 every year to 2017 totals.
Liberty Hill	January 2009	$3,100.00	$4,195.00	$3,500.00	$3,500.00	$7,295.00	$7,000.00	$14,295.00	
Austin	January 2014								
Plats Recorded Prior 1-Oct-2007		Varies on Area	Varies on Area	$1,084.39	$0.00	Varies on Area	$1,084.39	Varies	Varies based on location : $800 to $3,000 Total
Plats Recorded 1-Oct-2007 to 31-Dec-2013		Varies on Area	Varies on Area	$1,384.39	$0.00	Varies on Area	$1,384.39	Varies	Varies based on location - $1,100 to $3,900 Total.
Plats Recorded after 1-Jan 2014		$5,400.00	$2,200.00	$7,884.39	$0.00	$7,600.00	$7,884.39	$15,484.39	Water & Wwater Combine
Pflugerville	July 2014								
Central		$4,241.00	$2,725.00	$250.00	$250.00	$6,966.00	$500.00	$7,466.00	
Cottonwood		$0.00	$3,537.00	$250.00	$250.00	$3,537.00	$500.00	$4,037.00	
Hutto	Feburary 2013								
Plats Recorded Prior 1-Feb-2013		$4,363.00	$1,068.00	$600.00	$300.00	$5,431.00	$900.00	$6,331.00	
Plats Recorded After 1-Feb-2013		$3,625.00	$2,128.00	$600.00	$300.00	$5,753.00	$900.00	$6,653.00	
Burnet	December 2004	$1,084.50	$1,173.00	$525.00	$500.00	$2,257.50	$1,025.00	$3,282.50	
Horseshoe Bay	October 2013	$3,296.00	$2,012.00	$1,350.00	$3,700.00	$5,308.00	$10,358.00	$15,666.00	

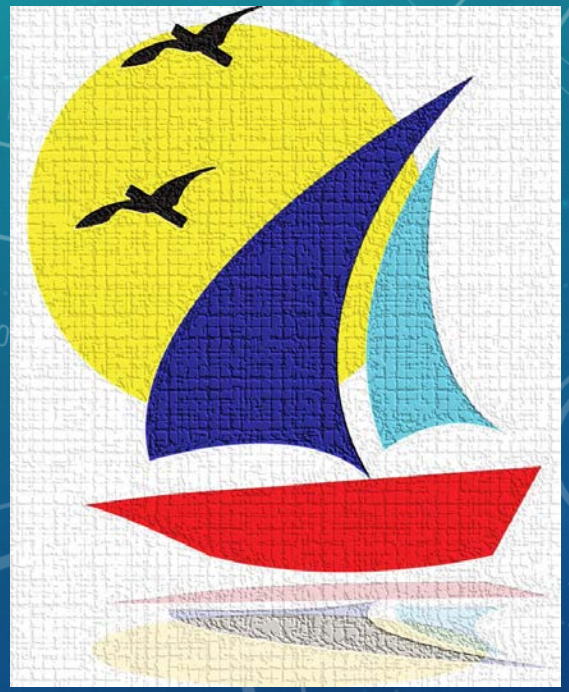

FY15/16 CIP

CITY OF LAGO VISTA

2015 DECEMBER PRESENTATION

WATER DISTRIBUTION

DESIGN BOOSTER PUMP STATION AT AIRPORT WATER PRESSURE PLANE

Description	To install booster pump station at airport pressure plane.
Justification	Water pressure increase necessary at Airport to support future growth and development.
Estimated Timeline	July 2016
Cost Estimate	$120,000
Funding Source	Impact Fees

WASTEWATER COLLECTION

BRONCO WASTEWATER LINE REPLACEMENT CONSTRUCTION

Description	Reroute 8" wastewater main to replace wastewater line
Justification	To improve system functionality by replacing an aging wastewater main, increase size to promote commercial and residential growth in the area
Estimated Timeline	October 2016
Cost Estimate	$100,000
Funding Source	C of O's

WASTEWATER TREATMENT

DESIGN & CONSTRUCTION OF REINFORCEMENTS TO EXISTING WASTEWATER TREATMENT PLANT

Description	Design and Construct reinforcements to the City's existing Wastewater Treatment Plant
Justification	To provide increased strength, reliability and life to the City's Wastewater Treatment Plant
Estimated Timeline	Jul-16
Cost Estimate	$100,000
Funding Source	C of O's

WASTEWATER TREATMENT

DESIGN OF WASTEWATER TREATMENT PLANT 2ND CLARIFIER

Description	Design engineered drawings in preparation for construction of a 2nd clarifier at the Wastewater Treatment Plant
Justification	The City relies solely on one clarifier at this time, the construction of a 2nd clarifier would provide redundancy and expanded treatment capacity
Estimated Timeline	Summer 2016
Cost Estimate	$100,000
Funding Source	Impact Fees

STREETS & DRAINAGE

TEXAS A&M PAVEMENT MANAGEMENT SYSTEM

Description	Texas A&M University Intern student, under the supervision of experienced professors, develop a pavement management system.
Justification	There is no data that shows the condition of City streets. This data is necessary to develop a plan for street maintenance and replacement.
Estimated Timeline	Summer 2016
Cost Estimate	$100,000
Funding Source	C of O's

STREETS & DRAINAGE

TRAFFIC SIGNAL AT LOHMAN FORD RD & BOGGY FORD RD

Description	Design, Right of Way Acquisition and Construction of a traffic signal at Lohman Ford Rd and Boggy Ford Road intersection
Justification	To enhance public safety at this location and more traffic through the intersection
Estimated Timeline	Complete prior to FY16/17 school year
Cost Estimate	$400,000
Funding Source	City C of O's

STREETS & DRAINAGE

CAMILLE COURT & DAWN DR

Description	Design and Construct Improvements
Justification	To enhance public safety at this location
Estimated Timeline	Oct-16
Cost Estimate	$200,000
Funding Source	C of O's

STREETS & DRAINAGE

FLASHING LIGHTS AT MIDDLE SCHOOL

Description	Install flashing school zone speed limit lights
Justification	Visual notification for traffic during school zone active periods
Estimated Timeline	Aug-16
Cost Estimate	$15,000
Funding Source	C of O's

STREETS & DRAINAGE

SAFE ROUTES TO SCHOOLS SIDEWALKS ENGINEERING

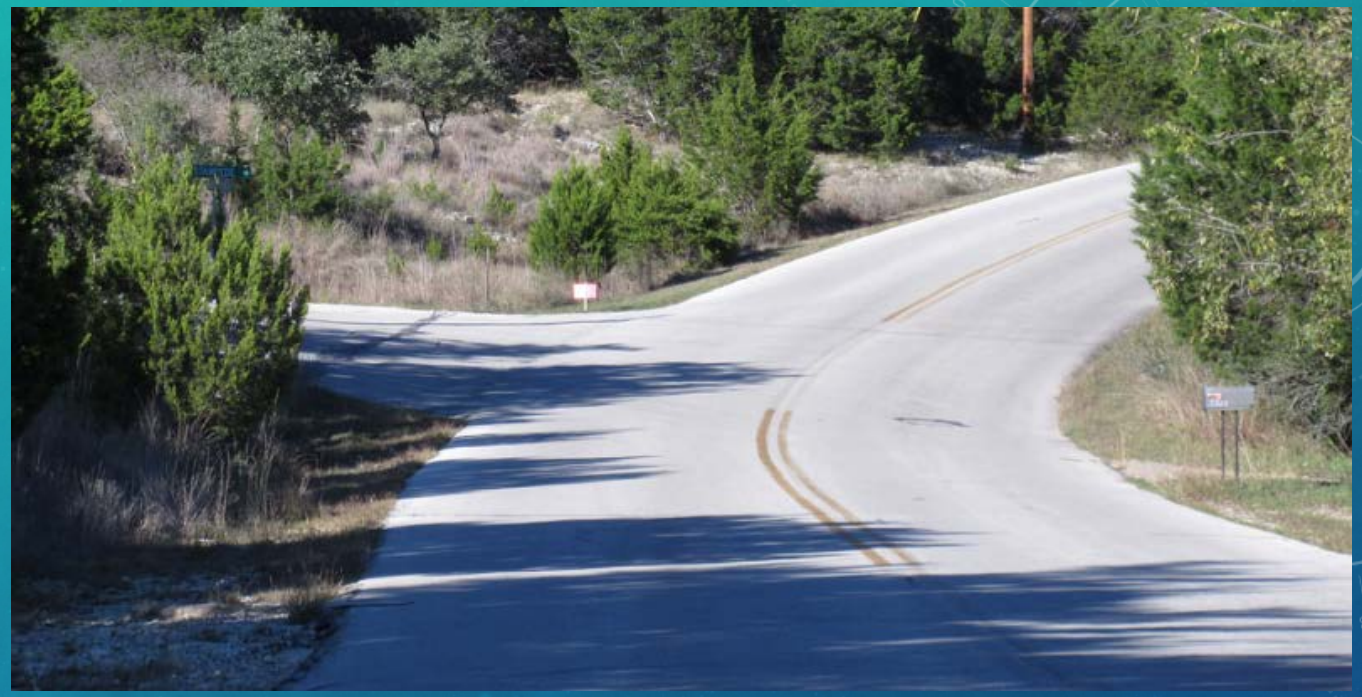

Description	Install sidewalks around Lago Vista Middle School and leading to Middle School along Bar K Ranch Road
Justification	Enhance student safety to and from school along Bar K Ranch Road
Estimated Timeline	Summer 2016. Funding for construction (70% / 30%) should be available in FY16/17
Cost Estimate	$75,000
Funding Source	City must pay 100% of engineering costs. C of O's

PARKS

SHADE STRUCTURE AT UPPER BALLFIELD

Description	Install shade structures over existing bleachers at upper baseball field on Bar K Ranch Road at Sports Complex
Justification	To provide shade for spectators at Upper Baseball field as to create a better experience
Estimated Timeline	Apr-16
Cost Estimate	$20,000
Funding Source	C of O's

PARKS

FENCE REPLACEMENT UPPER BALLFIELD

Description	Replace aging and worn out fence at Upper Baseball Filed at the City's Sports Complex on Bar K Ranch Road
Justification	To increase safety of players and beautify park for citizen enjoyment
Estimated Timeline	Apr-16
Cost Estimate	$17,000
Funding Source	C of O's

PARKS

VETERAN’S PARK

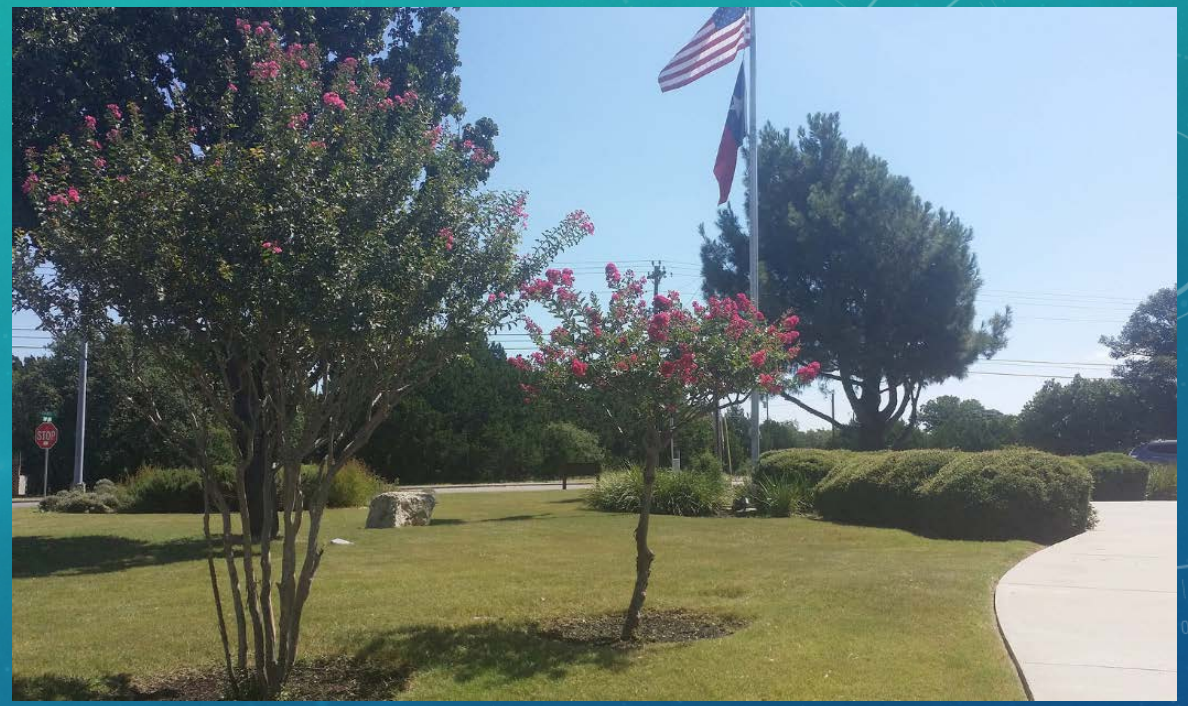

Description	Funding to enhance Veteran's Park
Justification	To honor Veterans on behalf of Lago Vista Citizens by aiding in a community effort to create a monument to last decades and beautify the City's park
Estimated Timeline	All park improvements to be completed by November 2016
Cost Estimate	$20,000
Funding Source	C of O's

AQUATICS

REPLACE POOL GUTTERS

Description	Replace perimeter filtration gutters at City of Lago Vista's Pool
Justification	Perimeter filtration gutter system is constructed of plastic that needs be replaced
Estimated Timeline	May-16
Cost Estimate	$9,000
Funding Source	C of O's

PUBLIC WORKS, PLANNING AND CITY FACILITIES

BACK UP GENERATORS CITY HALL, POLICE DEPARTMENT & LIBRARY

Description	Purchase and install back up power generators at City Hall, Police Department. Existing backup generator at Police Department will be relocated to library
Justification	To allow City Hall, Police Department and Library to remain functional in the event of a power outage allowing seamless operation during times of need. Police Department generator not sufficient.
Estimated Timeline	Oct-16
Cost Estimate	$50,000
Funding Source	C of O's

PUBLIC WORKS, PLANNING AND CITY FACILITIES

COMPREHENSIVE PLAN UPDATE

COMPREHENSIVE *Plan*

2015/2016 UPDATE

Description	Pay remaining 2nd half of the cost to complete plan approved by City Council August 2015
Justification	To complete ongoing project
Estimated Timeline	Apr-16
Cost Estimate	$70,000
Funding Source	C of O's / Reserves

PUBLIC WORKS, PLANNING AND CITY FACILITIES

WATER SYSTEM MASTER PLAN

Description	Develop a comprehensive plan for the Water System
Justification	Water Plan will provide for an efficient and functional Water Distribution System
Estimated Timeline	Jul-16
Cost Estimate	$75,000
Funding Source	Impact Fees

PUBLIC WORKS, PLANNING AND CITY FACILITIES

HOLLOWS WATER QUALITY REHAB

Description	Construct Water Quality Improvements and erosion control improvements in the Hollows
Justification	Required by the Hollows/Centex agreement
Estimated Timeline	Unknown
Cost Estimate	$330,000
Funding Source	Centex Agreement

PUBLIC WORKS, PLANNING AND CITY FACILITIES

RADIO STATION (INFRASTRUCTURE AND ANTENNA)

Description	Relocate antenna and purchase needed equipment to bring City's AM radio station back online.
Justification	This is a way to share information that is available to everyone. It can be used during emergencies and it can be used to share information with visitors.
Estimated Timeline	Feb-16
Cost Estimate	$20,000
Funding Source	C of O's. Possibly some H.O.T. funds.

GOLF

CART PATH REPLACEMENT ENGINEERING

Description	Develop engineered plans for golf cart paths at Highland Lakes Golf Course
Justification	Engineered designed cart paths to enhance safety and usability of the Highland Lakes Golf Course Paths
Estimated Timeline	2016
Cost Estimate	$50,000 - C of O's
Funding Source	C of O's. Dedicated revenue from Cart Path Fees to be paid every round of golf.

GOLF

CART PATH REPLACEMENT CONSTRUCTION

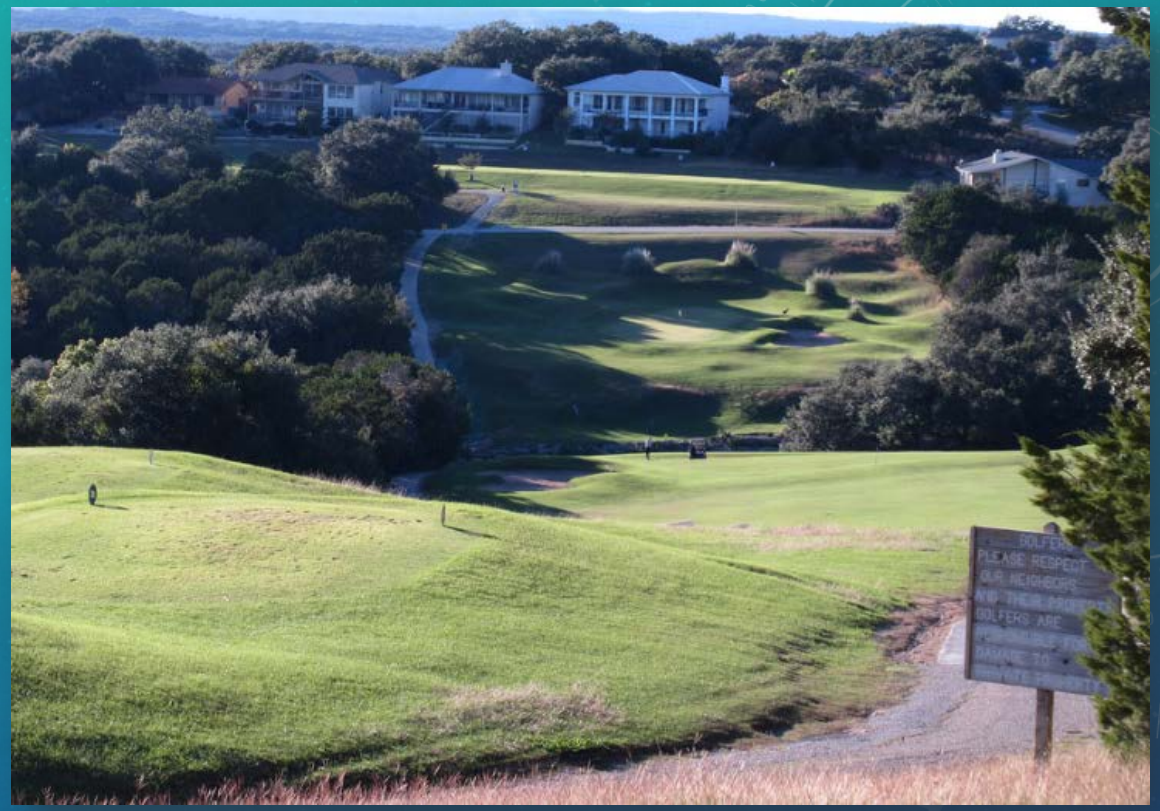

Description	Construct replacement cart paths that are more terrain friendly at Highlands Lake Golf Course
Justification	Enhance safety and usability of the Highland Lakes Golf Course Paths
Estimated Timeline	2016
Cost Estimate	$300,000 - C of O's
Funding Source	C of O's. Dedicated revenue from Cart Path Fees to be paid every round of golf.

CIP FY15/16
QUESTIONS